2021-22

ESTIMATION & COST EVALUATION-II

STRICTLY ACCORDING SCTE&VT SYLLABUS

5TH SEMESTER CIVIL ENGINEERING

DEPARTMENT OF CIVIL ENGINEERING

PREPARED BY: SATYANARAYAN BHUSAGAR

SCTE&VT SYLLABUS 2021-2022

SL NO	TOPICS
01	Detailed estimate of culverts and bridges
02	Estimate of irrigation structures
03	Detailed estimate of roads
04	Detailed estimates of miscellaneous works
05	PWD accounts works

BRIDGES AND CULVERTS

Culverts and Bridge :-

According to I.R.C. specification, a culvert is one which has a linear waterway upto 6m and structures having a linear water way above 6m but below 30m as minor bridges and structures having a linear waterway of 30m or more as Major Bridges.

As a general rule, a minimum of 6m of linear waterway should be provided per 1.5 km. of the road for efficient drainage.

Abutment Wall :-

It is a masonary or reinforced concrete wall that constitutes the end support of bridge or similar structures by which its [redacted] joins the banks of water ways.

Wing Wall :-

Wing wall is a retaining wall which sustains the embankments of the approaches where they join the bridge.

Return Wall :-

A return wall is a retaining wall built parallel to the centre line of a road to retain the embankment.

Curtain Wall :-

Cross wall are built across the stream, on the up-stream or down stream in order to protect the structure from erosion due to strong current of water induced by the restriction of free passage of water through the waterway.

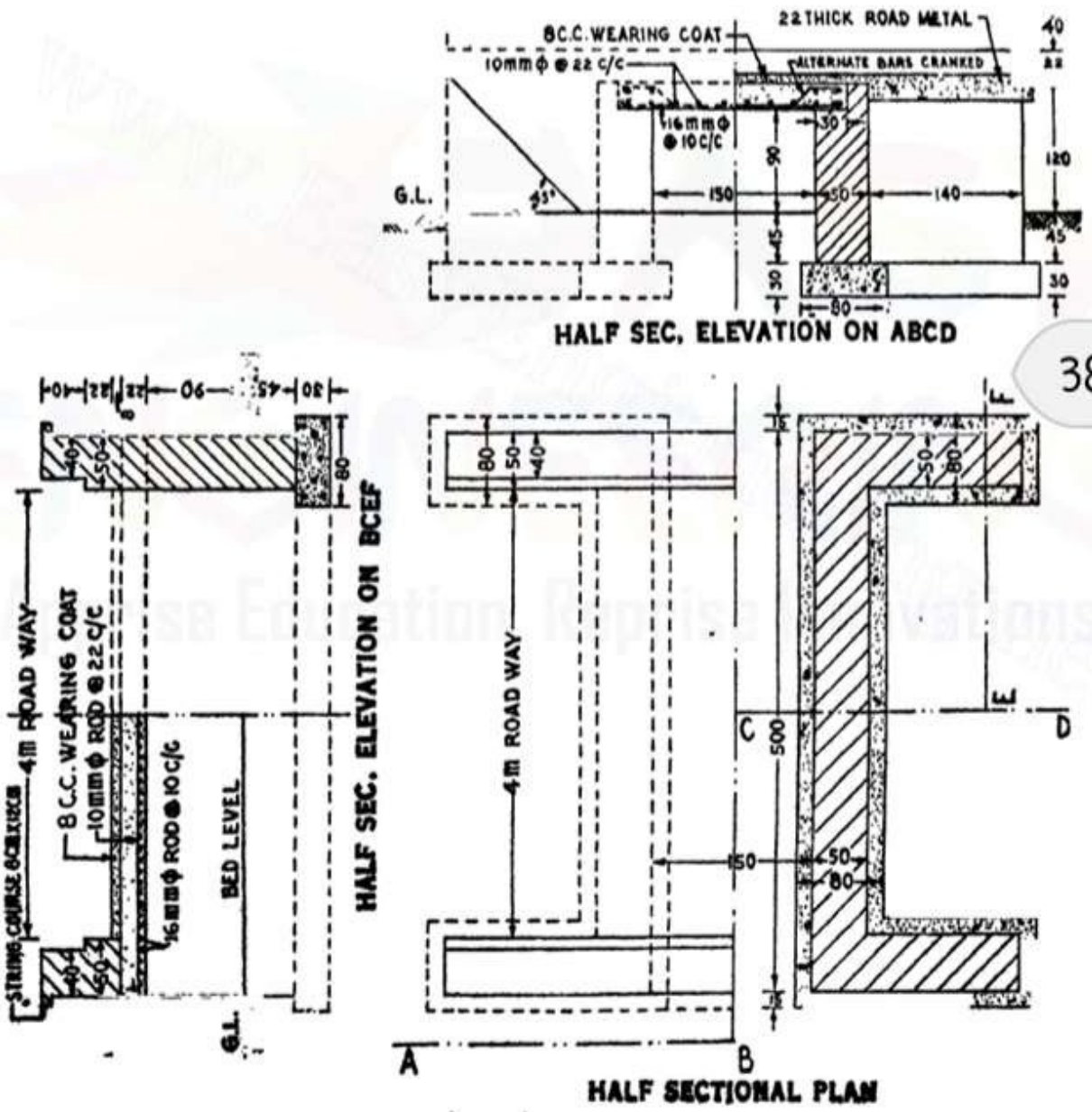

381

FIG. 8·15

All dimensions are in Centimetre. Scale 1 : 75

Q. Prepare a quantity survey for a slab culvert of 1.5m clear span and 4m Road way as shown in figure.

The general specification are as follows:-

Foundation shall be of cement concrete 1:2:4. Brickwork shall be of 1st class in cement mortar 1:4, Exposed surfaces of brick masonry shall be cement pointed 1:3 carried upto 15cm below G.L. The exposed surface of R.C.C. slab shall be given a smooth finish during centering and no plastering should be allowed. The string courses shall be 8cm deep and 12mm thick with cement mortar 1:3 finished with neat cement. (Weight of 16mm and 10mm dia. bars 1.58kg and 0.58kg respectively per m).

Item No.	Description	No.	Length (cm)	Breadth (cm)	Height (cm)	Quantity	Remark
1.	Earthwork in excavation for						
	(a) Abutment walls	2	530	80	75	6.36 cum	
	(b) Wing Walls	4	140	80	75	3.36 cum	
					Total =	9.72 cum	
2.	Cement concrete in foundation (1:2:4) for						
	(a) Abutment Walls	2	530	80	30	2.54 cum	
	(b) Wing Walls	4	140	80	30	1.38 cum	
					Total =	3.88 cum	
3.	1st class brickwork in cement mortar (1:4) for						
	(a) Abutment Walls	2	500	50	157	7.85 cum	157 = 45+90 +22
	(b) Wing Walls	4	140	50	157	4.40 cum	
	(c) Parapet 50cm thick	2	530	50	30	1.59 cum	
	(d) Parapet 40cm thick	4	530	40	40	1.70 cum	
	Deduction for bearing of R.C.C. Slab in Abutment	2	500	30	22	- 0.66	
					Total =	14.88 cum	
4.	Cement Pointing (1:3) to exposed surface of brickwork						
	(a) Inner face of Abutment	2	500		50	10.5	
	(b) Face Walls (as a whole)	2	530		189	20.0	
	(c) Inner side and top of parapets	2x2	530		112	11.9	
	(d) Ends of parapet (50cm)	2x2	50		30	0.6	
	Ends of parapet (40cm)	2x2	40		40	0.6	
	Deduction for						
	(a) Rectangular opening	2	150	105		- 3.2	
	(b) Triangular portion of face walls hidden by earth	4x4	140	140		- 3.9	
					Total =	36.5 sq.m	

Item No.	Description	No.	L cm	B cm	H cm	Quantity	Remark
5.	8cm x 12cm string course	2	530			10.6 rm	
6.	R.C.C. Slab excluding reinforcement but including shuttering	1	500	210	22	2.31 cum	210 = 150 + 2x30
7.	@ Reinforcement -						
	(a) 16 mm θ straight bars	25	234			58.5 rm	
	(b) 16mm θ bent up bars	25	254			63.5 rm	
						Total = 122 rm @ 1.58 kg = 193	
	(c) 10mm θ bottom distribution bars	10	513			51.3 rm	
	(d) 10mm θ top distribution bars	4	513			20.52 rm	
						Total = 71.82 rm @ 0.62 kg = 45	
						Total = 238 kg	

ABSTRACT OF ESTIMATED COST

Item No.	Description	Qnty	Unit	Rate	Unit Rate	Amount
1.	Earthwork in excavation in foundation.	9.72	cum	300.00	cum	2916
2.	Cement Concrete (1:2:4) with stone chips in foundation.	3.88	cum	425.00	cum	1649.00
3.	1st class brickwork in cement mortar (1:4)	14.88	cum	290.00	cum	4315.20
4.	Cement pointing (1:3)	36.50	sq.m	4.50	sq.m	164.25
5.	8cm x 12 mm string course	10.60	rm	2.00	r.m	21.20
6.	R.C.C. work (1:2:4) excluding reinforcement but including shuttering	2.31	cum	460.00	cum	1062.60
7.	Mild steel bar for ~~including~~ reinforcement including bending and binding	2.38	qu.	550.00	qu.	1309.00
					Total =	11437.25
		Add 5% for contingency =				571.86
		Add 2% for W.C =				228.74
					Grand total =	12237.85

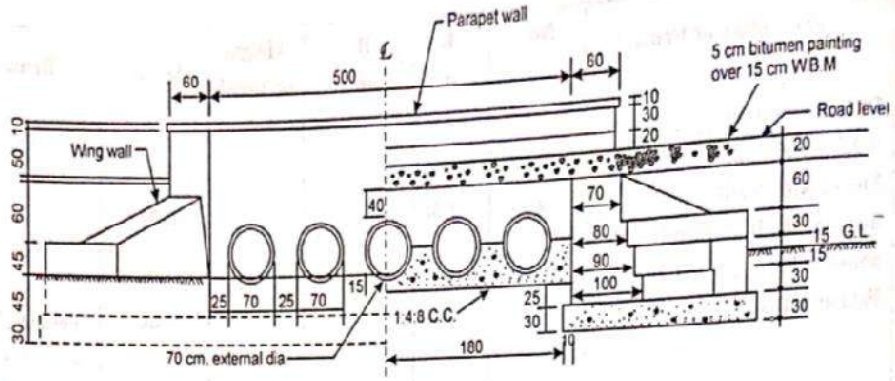

Half Elevation Half Sectional Elevation

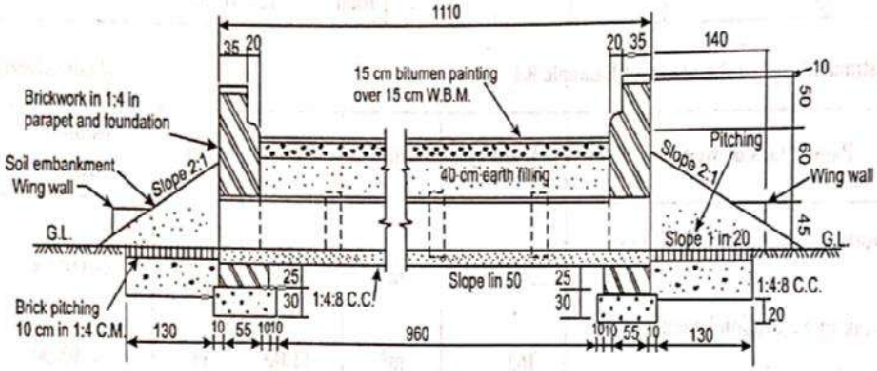

Sectional Side View

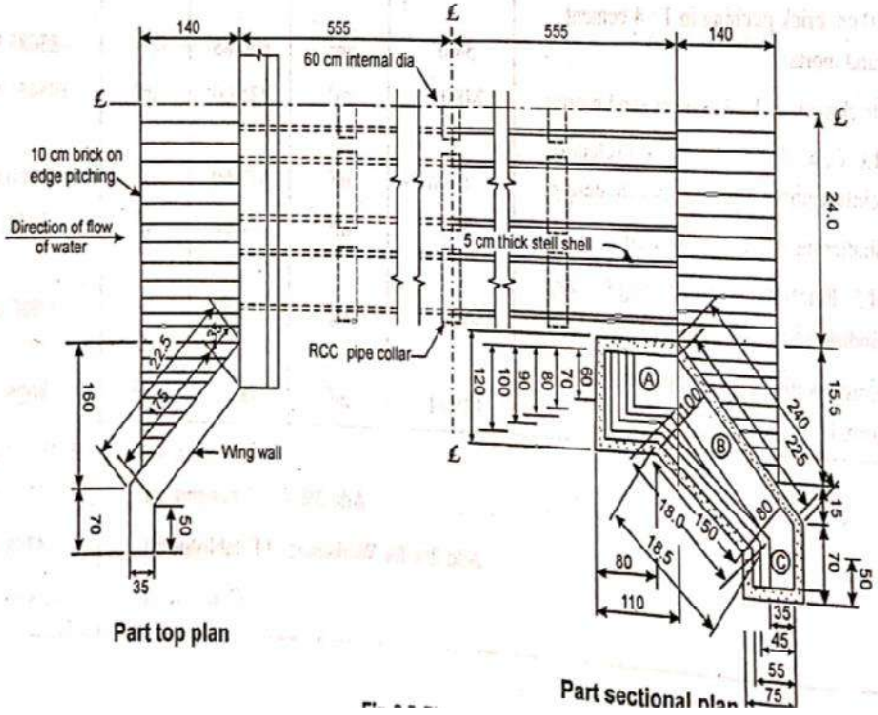

Part top plan Part sectional plan

Q. Figure shows the plan, elevation and sections of a pipe culvert. Prepare the detailed estimate of the pipe culvert with the following general specification:

Foundation concrete - 1:4:8 cement concrete with 40 mm stone ballast.

Hume pipe - 70cm external diameter.

Brickwork in face wall, wing wall, and parapet walls - 1st class brickwork in 1:4 cement sand mortar.

Upstream and Downstream pitching - 10cm thick pitching in 1:4 cement sand mortar.

Finishing - 1:2 cement pointing on all exposed surfaces of masonry.

Item No.	Description	No.	L m	B m	H m	Qnty.	Remarks
1.	Earthwork ~~in~~ excavation in foundation						
	Face Walls	2	4.8	0.85	0.75	6.12	
	Wing Walls portion A	4	1.1	0.95	0.75	3.14	$\frac{1.10+0.8}{2}=0.95$
	Wing Walls portion B	4	1.95	0.9	0.75	5.27	Average Length & breadth
	Wing walls portion C	4	0.45	0.75	0.75	1.01	Average length
	Under pipes	1	11.10	5.0	0.20	11.10	
	Under pitching	2	6.35	1.0	0.55	6.98	
					Total=	33.62 cum	
2.	Cement concrete 1:4:8 in foundation						
	Face Walls	2	4.8	0.85	0.30	2.45	
	Wing Walls portion A	4	1.10	0.95	0.30	1.25	
	Wing Walls portion B	4	~~1.95~~	0.9	0.30	2.10	
	Wing Walls portion C	4	0.65	0.75	0.30	0.58	
	Under pipes	1	11.10	5.00	0.50	27.75	
	Under pitching	2	6.35	1.40	0.35	6.22	
	Deduction						
	Half of pipes $\frac{\pi D^2}{4}\times l$	5	11.1	$\frac{\pi}{4}(0.7)^2$	-	21.35 (-ve)	
					Total=	19.00 cum	
3.	Hume pipe 70cm external dia. heavy duty including collar joint.	5	11.10			55.50m	
4.	1st class brickwork in 1:4 cement sand mortar						
	Face walls						
	Face walls between wing ~~wing~~ wall portion A to A 1st footing.	2	5.0	0.6	0.25	1.50	
	Above footing upto top of wing wall	2	5.0	0.55	0.85	4.68	
	Face of wall above top of wing wall to top of kerb	2	6.20	0.55	0.40	2.73	
	Face wall in parapet wall	2	6.20	0.95	0.40	4.71	

Item No	Description	No.	L m	B m	H m	Qnty	Remarks
	Wing Walls (portion A)						
	1st footing	4	1.0	0.85	0.30	1.02	
	2nd footing	4	0.9	0.75	0.30	0.81	
	3rd footing	4	0.8	0.7	0.30	0.67	
	4th footing	4	0.7	0.65	0.60	1.10	
	Wing Walls (portion B)						
	1st footing	4	1.925	0.675	0.30	1.56	
	2nd footing	4	1.975	0.575	0.30	1.37	
	3rd footing	4	2.025	2.05	0.30	4.98	
	4th footing	4	2.025	0.35	0.30	0.85	
	Wing Walls (portion C)						
	1st footing	4	0.60	0.55	0.30	0.40	
	2nd footing	4	0.625	0.45	0.30	0.34	
	3rd footing	4	0.65	0.35	0.30	0.27	
	Deduction						
	Half of pipe $\frac{\pi D^2}{4} l$	2×5	$\times 0.55$	$\times \frac{\pi}{4}$	$\times (0.7)^2$	$= -2.12$	
					Total=	24.87 cum	
5.	10cm brick pitching in 1:4 cement sand mortar Upstream & downstream	2	6.35	1.40		17.78 sq.m	
6.	Cement pointing 1:2 in exposed surface above G.L Face walls						
	Face wall upto top of wing wall	2	5.0	–	1.05	10.5	
	Face wall in parapet wall above top of wing wall	2	6.2	–	0.80	9.92	
	Top of parapet	2	6.2	0.35	–	4.34	
	Road, sides including kerbs	2	6.2	–	0.80	9.92	
	End of parapet	4	0.55	–	0.40	0.88	
		4	0.35	–	0.40	0.56	
	Wing walls						
	Portion B, Face	4	2.25	–	0.75	6.75	
	Portion C, Face	4	0.70	–	0.45	1.26	
	End	4	0.45	–	0.15	0.27	
		4	0.35	–	0.30	0.42	
	Deduction						
	Hume pipe $\frac{\pi D^2}{4}$	2×5	$\times \frac{\pi}{4}$	$\times (0.70)^2$		-3.85	
					Total=	40.97 sq.m	

ABSTRACT OF ESTIMATED COST

Item NO.	Description	Qnty.	Unit	Rate	Unit Rate	Amount
1.	Earthwork in excavation	33.62	m^3	4.70	m^3	158.01
2.	cement concrete 1:4:8	19.00	m^3	225.00	m^3	4275.00
3.	Hume pipe 70 cm external dia. including collor joint.	55.5	m	310.00	m	17205.00
4.	1st class brickwork in 1:4 cement sand mortar	24.87	m^3	390.00	m^3	9699.3
5.	10cm brick pitching in 1:4 cement sand mortar	17.78	m^2	29.20	m^2	519.18
6.	Cement pointing 1:2 in exposed surfaces	40.97	m^2	10.00	m^2	409.70

Total = 32266.19

Add 3% for contingencies = 967.98

Add 2% for Workcharged Establishment = 645.32

Grand Total = 33879.49

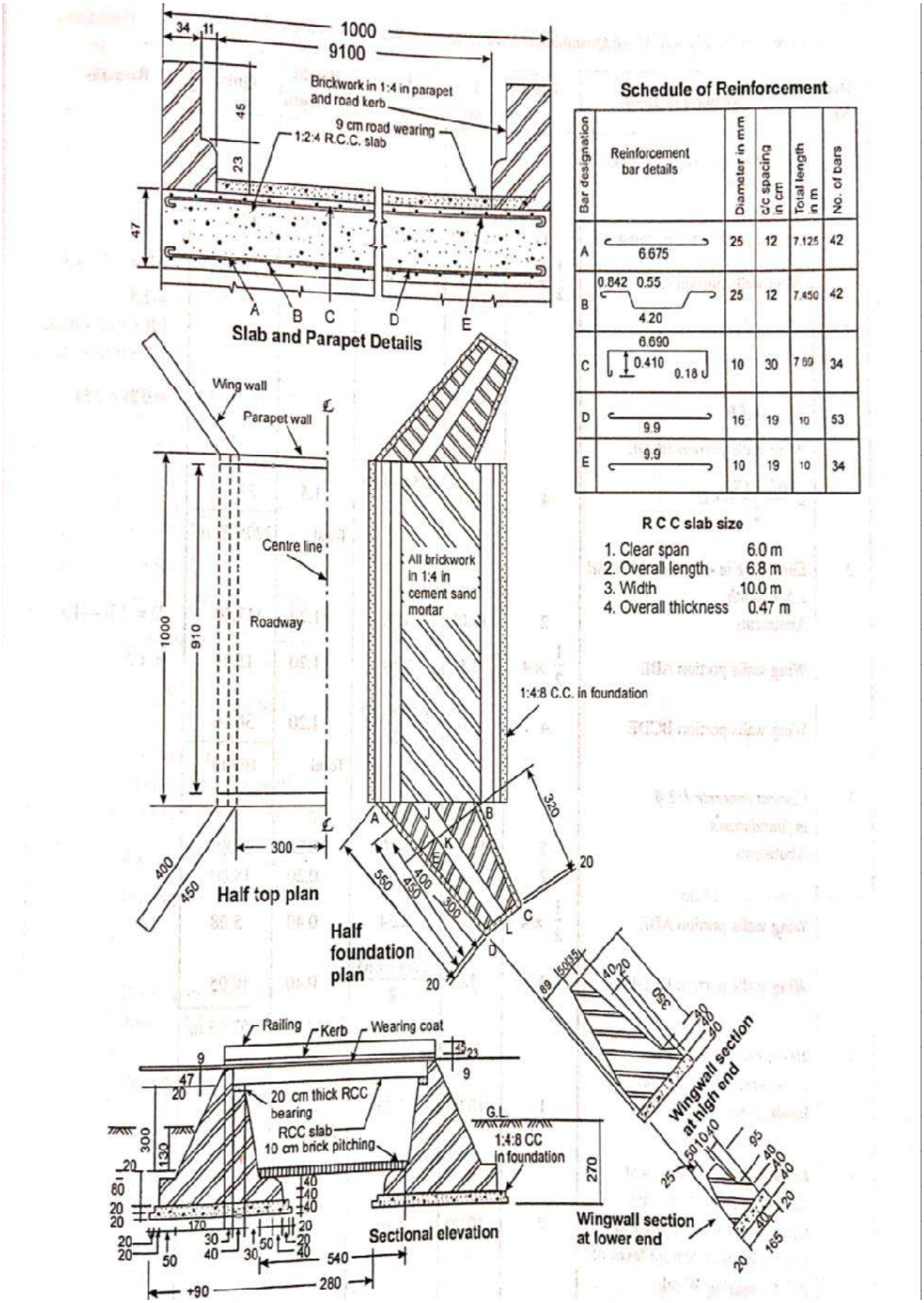

Schedule of Reinforcement

Bar designation	Reinforcement bar details	Diameter in mm	c/c spacing in cm	Total length in m	No. of bars
A	6.675	25	12	7.125	42
B	0.842 0.55 4.20	25	12	7.450	42
C	6.690, 0.410, 0.18	10	30	7.69	34
D	9.9	16	19	10	53
E	9.9	10	19	10	34

R C C slab size

1. Clear span 6.0 m
2. Overall length 6.8 m
3. Width 10.0 m
4. Overall thickness 0.47 m

Q. Figure shows the plan, foundation plan, sectional elevation and other detailed drawing of a slab culvert. Prepare the detailed estimate of the culvert with the following general specification:

Foundation concrete - 1:4:8 cement concrete with 40mm stone ballast.

Masonary work in parapet, abutment and wing wall - 1st. class brick work in 1:4 cement and mortar.

Bed pitching - 10cm thick brick pitching in 1:4 cement sand mortar.

Slab work - 1:2:4 R.C.C. Work.

Finishing - 1:2 cement sand struck pointing on all exposed masonary surfaces.

Adopt suitable rate.

Item No	Description	No.	L m	B m	H m	Qnty	Remark
1.	Earthwork in excavation up to 1.5 depth						
	Abutment	2	10.0	4.90	21.5	2107	
	Central portion for pitching	1	10.0	2.80	1.50	42.0	
	Wing wall portion ABE	$\frac{1}{2}\times 4$	2.5	2.54	1.50	19.05	
	Wing wall portion BCDE	4	3.0	2.095	1.5	37.71	
					Total =	2205.76	cum
2.	Earthwork in excavation beyond 1.5m depth						
	Abutment	2	10.0	4.90	1.20	117.60	
	Wing wall portion ABE	$\frac{1}{2}\times 4$	2.5	2.54	1.20	15.24	
	Wing wall portion BCDE	4	3.0	2.095	1.20	30.16	
					Total =	163.0	cum
3.	Cement concrete 1:2:4 in foundation						
	Abutment	2	10.0	4.90	0.20	19.60	
		2	10.0	4.50	0.20	18.00	
	Wing wall portion ABE	$\frac{1}{2}\times 4$	2.5	2.54	0.40	5.08	
	Wing wall portion BCDE	4	3.0	2.095	0.40	10.05	
					Total =	52.73	cum
4.	10cm brick pitching in 1:4 cement sand mortar						
	Inside culvert	1	10.0	5.40	–	54	sq.m
5.	Brickwork in 1:4 cement sand mortar in abutment						
	Upto pitching from pitching bottom level to bottom level of R.C.C. bearing width = $\frac{B_1+B_2}{2}$	2	10.0	1.755	3.20	112.32	
	From R.C.C bearing to top	2	10.0	0.455	0.67	6.09	
	In wing walls Sectional area at high end (from Drg) = $2.14\times 0.4 + \left(\frac{2.14+1.74}{2}\times 0.4\right) + \left(\frac{0.50+1.74}{2}\times 3.5\right)$ = 5.56						

Item No.	Description	No.	L m	B m	H m	Qnty.	Remarks
	Sectional area at lower end = $1.25 \times 0.40 + \frac{1.25+0.85}{2} \times 0.4 + \left(\frac{0.50+0.85}{2} \times 0.95\right)$						
	= 1.56 m^2						
	Brickwork in wing wall = mean area x average length						
	$= 4 \times \frac{5.56+1.56}{2} \times 4.25$					60.52	$4.25 = \frac{4.5+4.0}{2}$
	In parapet wall						
	Upto top of road kerb	2	7.4	0.45	0.32	2.13	L = 6.0 + 0.8 + 0.6 = 7.4
	Above road kerb	2	7.4	0.34	0.45	2.26	
	Deduction						
	For chamfering of Abutment	$\frac{1}{2}$	10.0	0.40	0.40	- 0.8	
					Total =	248.12 m	
6.	R.C.C. work 1:2:4 in slab excluding reinforcement centering & shuttering	1	10.0	6.80	0.47	31.96 sq.m	
7.	Shuttering & centering work.						
	Bottom slab	1	10.0	6.00	-	60.00	
	sides (Longer)	2	10.0	-	0.47	9.40	
	Sides (shorter)	2	6.80	-	0.47	6.40	
					Total =	75.8 sq.m^2	
8.	M.S. Reinforcement including bending, binding and placing in position						
	25 mm dia. bars	42	7.125			299.25	
		42	7.450			312.90	
					Total =	612.15 m @ 3.85 kg/m	
						= 2356.78 kg	
	16mm dia. bars	53	10.0			530.0 m @ 1.58 kg/m	
						= 837.4 kg.	
	10mm dia. bars	34	7.69	-	-	261.46	
		34	10.0			340.00	
					Total =	601 m @ 0.62 kg/m	
						= 372.9 kg	

Item No.	Description	No.	L m	B m	H m	Qnty	Remarks.
9.	Struck pointing 1:2 in cement sand mortar						$H=\sqrt{3.0^2+0.3^2}$
	Abutment inside faces	2	10.00	-	1.82	36.40	$=1.82$
	Inside faces of wing wall (Vertical portion)	4	5.50	-	0.80	17.60	
	Inside faces of wing wall (slopy portion)	4	5.50	-	2.295	50.49	
	Top of wing walls	4	4.96	0.50	-	9.92	$L=\sqrt{4.25^2+2.55^2}$ $=4.96$
	Average plan length $=\frac{4.5+4.0}{2}=4.25$						
	Diff. in elevation $=3.5-0.95=2.55$						
	End of wing walls	4	1.56			6.24	
	Section area from Item No. 5 above at lower end $=1.56\,m^2$					3.98	
	Parapet walls	2	1.99				
	Ends of parapets	4	0.45		0.32	0.576	
		4	0.34		0.45	0.61	
					Total=	125.81	sq.m

ABSTRACT OF ESTIMATED COST

Item No.	Description	Qnty	Unit	Rate	Unit Rate	Amount
1.	Earthwork in excavation up to 1.5 m in depth	2205.76	cum	8.80	cum	19410.68
2.	Earthwork excavation beyond 1.5m depth	163	cum	11.00	cum	1793.00
3.	Cement concrete 1:4:8 in foundation	52.73	cum	390.90	cum	20585.79
4.	10cm brick pitching 1:4 cement sand mortar	54.0	sq.m	660.85		35685.90
5.	Brickwork in 1:4 cement sand mortar	248.12	cum	425.0	cum	105451.00
6.	R.C.C. work 1:2:4 in slab excluding reinforcement centering and shuttering	31.96	m^2	577.60	cum	18460.04
7.	Shuttering and centering	75.8	m^2	47.80	cum	3623.24
8.	M.S Reinforcement including bending, binding and placing in position	3567.1	kg	9.50	kg	33887.45
9.	struck pointing 1:2 in cement sand mortar	125.81	m^2	8.15	cum	1025.35
					Total =	239922.45
					Add 3% for contingencies =	7197.67
					Add 2% for Workcharged Establishment =	4798.45
					Grand total =	251918.57

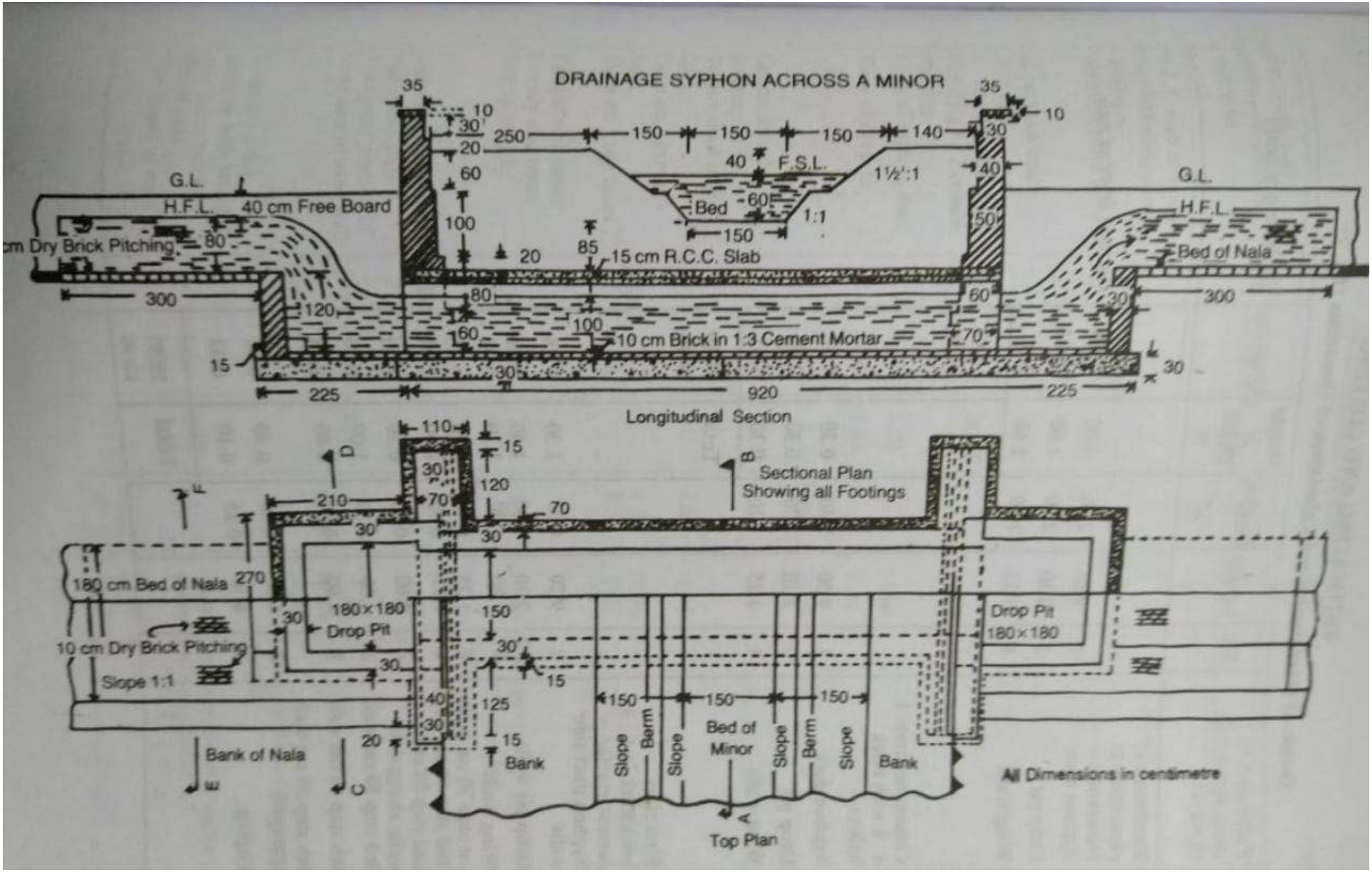
DRAINAGE SYPHON ACROSS A MINOR
G.L.
H.F.L.
40 cm Free Board
cm Dry Brick Pitching
15 cm R.C.C. Slab
10 cm Brick in 1:3 Cement Mortar
F.S.L.
Bed
1½':1
1:1
Bed of Nala
Longitudinal Section
Sectional Plan
Showing all Footings
180 cm Bed of Nala
10 cm Dry Brick Pitching
Slope 1:1
180×180
Drop Pit
Bank of Nala
Slope
Berm
Bed of
Minor
Bank
All Dimensions in centimetre
Top Plan

Item no.	Particulars of items and details of works	No	Length (m)	Breadth (m)	Height or Depth (m)	Quantity	Explanatory Notes
1.	Earthwork in excavation in foundation						For bed level of nala
	Syphon duct	1	9.50	2.40	1.60	36.48	
	Drop pit	2	2.10	2.70	1.60	18.14	
	Wing walls	4	1.25	1.10	1.60	8.80	
					Total	63.42 Cum.	
2	Cement concrete 1:4:8 with brick ballast						
	Syphon duct	1	9.50	2.40	0.30	6.84	
	Drop pit	2	2.10	2.70	0.30	3.40	
	Wing walls	4	1.25	1.10	0.30	1.65	
					Total	11.89 cum	
3	First class brickwork in 1:4 cement mortar						
	Syphon duct side walls	2	9.20	0.30	1.30	7.18	
	Drop pit walls	2x2	2.10	0.30	1.30	3.28	
	Wing walls	2	1.80	0.30	1.30	1.40	
	1st step 70 cm walls	4	1.25	0.70	0.70	2.45	
	2nd step 60 cm walls	4	1.25	0.60	0.60	1.80	Upto top of slab
	Wall above slab						
	3rd step 50 cm wall	2	4.60	0.50	1.00	4.60	
	4th step 90 cm wall	2	4.60	0.40	0.80	2.94	
	5th step 30 cm wall (parapet)	2	4.60	0.30	0.30	0.83	
	Coping	2	4.70	0.35	0.10	0.33	
					Total	25.91 cum	
4.	R.C.C. Slab of Syphon duct including steel reinforcement complete work	1	9.20	2.10	0.15	2.90 Cum	
5.	10 cm thick brick floor in 1:3 cement mortar including 1:2 cement pointing						
	floor of Syphon duct	1	9.20	1.50	—	13.80	
	floor of drop pit	2	1.80	1.80	—	6.48	
					Total	20.28 Sq.m	

Scanned with CamScanner

Item no	Particulars of items and details of works	No.	Length (m)	Breadth (m)	Height or Depth (m)	Quantity	Explanatory Notes
6.	Cement struck pointing 1:2 syphon duct						
	inner faces	2	9.20	—	1.00	18.40	
	Drop pit 3 vertical faces	2×3	1.80	—	1.20	12.96	
	Drop pit 3 top faces	2	5.7	—	0.30	3.42	L = 2×180 + 2P = 570 cm
	parapet wall inner face top and outer face upto G.L.	2	4.60	—	2.30	21.16	H1. 20+10+30 +10+35+10+5+10 = 230 cm
	Outerface of wing wall above slab	2	1.80	—	1.20	4.32	
	Tolangular portion of outer face of wing wall	2×2	(½ × .8 × .8)			1.28	
					Total	61.54 Sq.m	
7.	10 cm dry brick pitching with straight over burnt bricks —						Thin pitching, unit area basis
	Bed of nala	2	3.00	1.80		10.80	
	Side slopes of nala	2×2	3.00	1.13		13.56	up and down stream sloping breadth $\sqrt{.8^2+.8^2}=1.13$m
					Total	24.36 Sqm	

Item no	Particulars	Unit	Quantity	Rate Rs. P.	per	Amount Rs P	
1.	Earthwork in excavation	Cum	63.42	350.00	% Cum	221.97	
2.	cement concrete 1:4:8 with brick ballast	Cum	11.89	375.00	% Cum	4458.75	
3.	First class brick work in 1:4 cement mortar	Cum	25.91	365.00	/ Cum	9457.15	
4.	RCC Slab including steel reinforcement complete work	Cum	2.90	775.00	/ Cum	2247.50	
5.	10 cm thick brick floor in 1:3 cement mortar with 1:2 cement pointing	Sq m	20.28	40.00	/ Sqm	811.20	
6	Cement struck pointing with 1:2 cement mortar in walls	Sq.m	61.54	5.60	/ Sqm	344.62	
7.	10 cm dry brick pitching with straight over burnt brick	Sqm	24.36	12.00	/ Sqm	292.32	
					Total	17833.51	
	Add 5% contingencies & work charged Establishment					891.68	
					Overall Total	18725.19	

Scanned with CamScanner

Ch-2

Estimate of irrigation structure

estimate of a 1 metre fall :-

Prepare a detailed estimate of a 1m fall for a branch canal having 1.65 m bed width 76cm depth of water, from the general specifications are

(1) Foundation of abutment, wing & drop walls and flooring shall be cement concrete (1:4:8)

(2) wearing coat, floor between w/s wing walls, friction block, staggered blocks and crest shall be cement concrete (1:2:4)

(3) All brickwork shall be 1st class in cement mortar (1:4)

(4) All exposed surface of brickwork shall be made flush pointed in cement mortar (1:3). Assume suitable rates.

Item No	Description	No	L (m)	B (m)	H (m)	Q	Total	Explanatory notes
(1)	Earthwork in excavation.							
	(a) abutment walls							
	Straight portion	2	1.5	1.05	2.03	6.39		1.05 = .90 + .15
	Tapper portion	2	1.5	0.98	2.03	5.97		0.98 = ½(1.05+.90)
	Splayed portion	2	1.82	.90	2.03	6.65		

Item No	Description	No	L m	B m	H m	Q.	Total Explanatory notes
	(b) wing walls U/S	2	1.99	0.90	2.03	7.28	$1.35 = \frac{2\pi \times .83}{4}$
	D/S	2	0.83	0.90	2.03	5.74	6.83
	(c) drop walls U/S	1	2.4	0.54	0.96	1.24	Small overlaping neglected
	d/s	1	3.68	0.54	2.26	4.49	$3.68 = 1.68 + 2 \times (.76 - \frac{.38}{2}) \times \tan 60°$
	(d) Floor						
	betn straight abutment	1	3	0.90	2.03	5.48	$.90 = 2(.60 - .15)$
	betn splayed abut.	1	1.95	1.14	1.87	4.16	$1.95 = 1.8 + .15$ $1.14 = \frac{1}{2} \times 2(.60 - .15) + (1.68 - .30)$
	Between U/S wing walls	1	0.58	1.44	0.36	0.30	$0.58 = 0.80 - 0.07 - 0.15$
	Betn d/s wing walls	1	0.21	1.38	1.87	0.54	$0.21 = 3 \times 0.3 - .54 - .15$
						48.24	
	(e) For stone appron U/S	1	2	1.68	0.30	1.01	
	revetment U/S	2	$\frac{1}{2}(2+2.40)$	1.07	0.30	1.41	$1.07 = \sqrt{(0.76)^2 + (0.76)^2}$
	appron d/s	1	3	1.68	0.30	1.51	
	reventment d/s	2	$\frac{1}{2}(3+3.76)$	0.91	0.30	1.85	
						54.0	cu.m.
2.	cement concrete in foundn (1:4:8)						
	(a) abutment st. portion	2	1.5	1.05	0.30	0.945	

Tapper portion	2	1.5	0.98	0.30	0.882		
splayed portion	2	1.82	0.90	0.30	0.983		
(b) wing walls							
u/s	2	1.99	0.90	0.30	1.075		
~~d/s~~	~~½(135 ×1.79)~~	~~3.90~~	~~0.~~				
d/s	2	½(135 ×1.79)	3.90	0.30	0.848		
(c) Drop walls							
u/s	1	2.4	0.54	0.23	0.293		
d/s	1	3.68	0.54	0.69	1.371		0.69 = 72.87 − .08 = 72.10
(d)							
floors betn							
str abutment	1	1.5	0.90	0.54	0.729		
do do	1	1.5	0.90	.46	0.828		
splayed abutments	1	1.95	1.14	0.30	0.667		deduction are to be made
betn d/s wings	1	0.21	1.38	0.30	0.087		
deduction for grooving below breast wall	1	1	1.20	0.15	0.180		
						8.52 cum	
3 cement concrete 1:2:4							
(a) betn u/s wing walls	1	0.88	1.44	0.20	0.250		$0.88 = \sqrt{(.80)^2 + (.37)^2}$ $1.44 = \frac{1}{2} \times 2(.60 + .84)$
portion laid on drop wall	1	1.68	0.08	0.10	0.180		
(b) wearing coat betn							
str abutment	1	1.5	1.20	0.08	0.360		
splayed abut.	1	1.95	1.14	0.08	0.178		
sloping top portion	1	0.15	1.68	½×.13	0.038		
btn d/s wings	1	0.61	1.68	0.30	0.307		

(c) friction blocks	2	0.38	0.30	0.23	0.052	
(d) staggered blocks	3	0.38	0.30	0.23	0.072	
(e) top breast wall	1	0.95	1.20	0.20	0.180	
					1.471	cu.m
4 1st class brick work in cement mortar (1:4)						
(a) wing wall u/s 60cm	2	1.84	0.60	1	2.208	1.84 = 1.99 (as on earth work) - 1.15
50cm	2	1.95	0.50	1.58	3.081	1.95 = 1.54 + $\frac{25 \times 0.92}{4}$
d/s 60cm	2	1.35	0.60	1	1.620	0.92 is mean radius.
50cm	2	1.35	0.50	0.58	0.783	
(b) Abutments						
Rect. portion 60cm	2	1.35	0.90	1	1.890	1.35 = 0.75 + 0.60
50cm	2	1.35	0.50	1.58	2.133	
Tapper portion bottom	2	1.5	.75	1	2.250	
stepping 50cm	2	0.30	0.50	1.28	0.384	1.28 = 1.58 - 0.30
do	2	0.30	0.50	0.98	0.294	
do	2	0.90	0.50	0.68	0.612	0.90 = 1.5 - 2×0.30
Splayed portion 60cm	2	1.62	0.60	1	2.184	
50cm	2	1.82	0.50	0.58	1.056	
(c) drop wall u/s	1	2.4	0.40	0.37	0.355	
d/s	1	3.68	0.40	0.15	0.234	
(d) breast wall	1	1.2	1.05	1.45	1.827	
deduction grooving	1	1.2	0.35	0.15	0.063	-ve
					20.961	cu.m

5 Flush or rule pointing to exposed joint of brick work in cement mortar (1:3)							$1.26 = \frac{2\pi \times 1.14}{4}$
(a) wing wall u/s top	2	1.26	0.50	–	1.26		$0.85 = 75.21 - 74.3$ $1.34 = 74.21 - 72.87$
inner side	2	1.59	–	2.85	9.00		
outer side	2	2.32	–	0.85	3.94		
(b) wing walls d/s top	2	1.35	0.50	–	1.35		
inner side	2	1.5	–	1.34	4.02		
					19.57 sq.m		
(c) abutments top st. portion	2	2.85	0.50	–	2.85		$2.50 = 2.58 - 0.08$
inner side	2	1.35	–	2.50	6.75		
steping	2	0.30	–	2.20	1.32		
do	2	0.30	–	1.90	1.14		
do	2	0.90	–	1.60	2.88		
Top of splayed port.	2	1.82	0.50	–	1.82		$2.1 = \sqrt{1.95^2 + .84^2}$
inner side	2	2.1	–	1.34	5.63		$1.3 = 74.17 - 72.33 - 0.54$
(d) breast wall	1	1.2	–	1.3	1.56		$1.43 = \sqrt{.60^2 + 1.3^2}$
do inner side	1	1.2	–	1.43	1.72		
deduction for breast wall joining abutment	2	1.06	–	1.3	2.67	-ve	
					42.49 sq.m.		

Rubble stone pitching						
up stream apron portion	1	2	1.68	1	3.36	
de-reverment	2	2.20	1.07	1	4.71	
d/s apron	1	3	1.68	1	5.04	
do reverment	2	3.38	1.07	1	7.23	
						20.34 Sq.m.

Abstract of estimated cost

item no	Description	Q	unit	Rate	unit of Rate	Amount Rs. P
(1)	Earthwork in excavation	54.02	cu.m	3.00	cu.m	162.06
2	cement concrete in fond (1:4:8)	8.158	cu.m	297.00	cu.m	2,532.52
3	cement concrete (1:2:4)	1.471	cu.m	425.00	cu.m	625.18
4	1st class brickwork (1:4) cement mortar	20.34	cu.m	280.00	cu.m	5,695.20
5	flush pointing	42.49	sq.m	3.43	sq.m	146.07
6	Rubble stone pitching	20.34	sq.m	30.00	sq.m	610.20
				Total -		9,771.53

Add contigency @ 5% = 488.58

work charge @ 2.5% = 244.29

Grand total = Rs 10,504.40.

Ex-2 Prepare a detailed estimate of a hume pipe syphon. Assume any suitable rate.

Item No	Description	No	L (m)	B (m)	H (m)	Qty	Total	Explanatory notes,
1	Earthwork in excavation for foundn,							
	canal guardwalls u/s & d/s sides	2×2	2.34	.70	.50	3.28		.50 = 31.21 − 30.71
	face walls u/s & d/s sides	2	5.50	1.00	1.50	27.50		1.50 = 31.21 − 29.71
	collar walls	3	2.41	.80	1.42	8.18		1.42 = 31.21 − 29.79
	for hume pipes	1	5.70	1.61	0.64	5.87		5.70 = 9.80 − 3×0.80 − 2×.85
	Bed petening u/s side –							
	Horizontal portion	1	1.50	1.22	0.30	0.55		1.12 = 2 − 3×.44
								1.84 = $\sqrt{1.9^2 + 1.6^2}$ − .15
	inclined portion	1	1.84	1.39	.30	.77		
	Bed petening d/s sides							
	horizontal portion	1	2.40	1.12	.30	.888		
	inclined portion	1	2.42	1.39	.30	1.01		
	side petening u/s on sides							
	1st portion from guard wall	2	3.35	2.60	.30	3.67		2.60 = $\sqrt{1.84^2 + 1.84^2}$
	end portion	2	1.95	2.20	.30	2.31		1.84 = 1.40 + .44
								2.20 = $\frac{1}{2}$ (2.60 + 0.80)
	side petening d/s on sides							1.80 = $\sqrt{0.80^2 + .92^2}$
	1st portion from guard wall	2	3.35	2.60	.30	5.22		

2nd portion	2	2.35	2.20	.30	3.10	
outside pitching u/s side			..		: : .	
3rd portion from guard	2	2.25	2.99	.30	4.00	
2nd portion	2	2.15	2.43	.30	3.14	
D/s side						
3rd portion	2	3.25	2.99	.30	5.52	
2nd portion	2	2.80	2.99	.30	5.02	
						8.100 cu.m
2 cement concrete on foundation (1:3:6)						
canal guard wall u/s & d/s	2x2	2.34	.70	1.15	.98	
Face walls u/s & d/s	2	5.50	1.00	.30	3.30	
collar walls	3	2.41	.89	11.5	.87	
						5.115 cu.m
3 Brick work in cement mortar (1:4)						
canal guard walls u/s & d/s	2x2	2.04	.40	.30	0.98	2.04 = 2.34 − 2x.15
2nd footing "	2x2	1.64	.40	.40	1.05	1.64 = 2.04 − .40
3rd " "	2x2	1.24	.40	.40	0.75	
4th " "	2x2	0.84	.40	.40	0.54	
Top " "	2x2	0.60	0.40	.24	0.23	
Face walls u/s & d/s						
3rd footing 70cm	2	5.20	.70	.90	6.55	
2nd footing 60cm		5.20	.60	.70	4.37	
3rd footing 50cm	2	5.20	.50	.50	2.50	
4th " 40cm	2	5.20	.40	.50	2.08	2.11 = 2.41 − 2x.15
collar walls	3	2.11	.50	.79	2.57	

9	Deduction for u/s & d/s						
	Face walls	2×2	$\frac{\pi}{4}(.68)^2 \times .65$			.94	-ve
	collar walls					1.18	-ve
						19.44	cu.m
4	Earth work in filling for canal guard walls						
	u/s & d/s	3.28	-(.98 + .98) = 1.32				
	face walls						
	u/s & d/s	2.75	-(.33 + 5.28) = 8.92				
	collar walls	8.18	-(.87 + 2.51) = 4.80				
						15.04	cu.m
5	Loose boulder pitching 15 cm thick cover hume pipes	1	8.60	5.20		44.72	
6	constructing 30 cm thick stone boulder pitching						
	Bed pitching						
	u/s side						
	horizontal portion	1	1.50	1.22	-	1.61	1.99 = 1.84 (as earthwork) + .15
	inclined portion	1	1.99	1.39	-	2.72	
	d/s side						
	horizontal portion	1	2.4	1.22	-	2.93	
	inclined portion	1	2.57	1.39	-	2.19	
						9.45	

	side pitching on slope						
	U/S						
	left portion	2	2.50	2.60	—	13.00	
	end portion	2	1.90	2.20	—	8.36	
	D/S						
	left portion	2	3.50	2.60	—	18.20	
	end portion	2	2.50	2.20	—	11.00	
	out standing pitching for U/S						
	left portion	2	2.25	2.99	—	12.45	
	end "	2	2.15	2.43	—	10.45	
	D/S						
	left portion	2	2.25	2.99	—	13.45	
	end "	2	2.80	2.99		16.75	
							133.11 Sq.m.
7	fetting & forming 60 cm dia, 40 cm thick pipe including supply & carriage of all material of site	4x2	2.45	—	—	19.60	19.60
8	site clearing		--		-	1	1 Ls

Abstract of estimated cost

Item No	Description	Quan	unit	Rate	unit of rate	Amount Rs. P
1	Earthwork in excavation	80.03	cu.m	320.00	cu.m	256.10
2	cement concrete in foundn (1:3:6)	5.15	cu.m	380.00	cu.m	1,957.10
3	I st class brick work cement mortar (1:4)	19.44	cu.m	280.00	cu.m	5,443.20
4	Earthwork in filling 20 cm layer	15.04	cu.m	255.00	cu.m	38.35
5	Loose boulder pitching 15cm thick	44.72	sq.m	20.00	sq.m	894.40
6	constructing 30 cm stone boulder pitching 1:4 cement mortar	113.11	sq.m	50.00	sq.m	5,655.50
(7)	Fitting & fixing 60 cm external dia 40 mm thick	19.60	rm	225.00	r.m	4,410.00
(8)	site clearing	1	item	100.00	L S	100.00
				Total =		18,754.65

Add 5% contigency = 937.73

Add 2.5% for work charge = 468.87

Grand total = 20,161.25

Road Estimating

Earthwork

Cross-section of earthwork of road in banking or in cutting is usually in the form of trapezium and the quantity of earthwork may be calculated by the following methods

Quantity or volume = sectional area x Length.

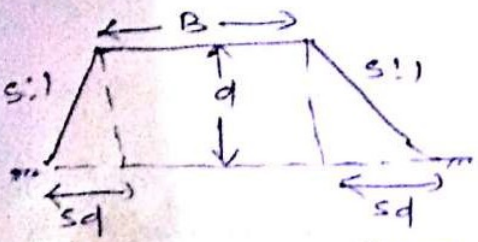

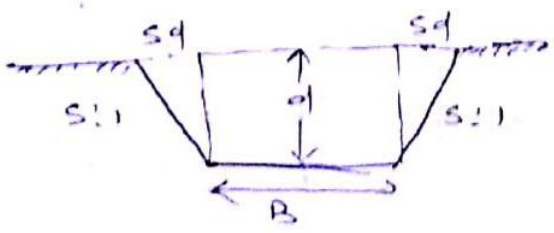

Sectional area = Area of central rectangular portion + Area of two side triangular portions.

$= Bd + 2\left(\frac{1}{2} sd \times d\right) = Bd + sd^2$

S:1 is the ratio of side slopes as horizontal : vertical

For 1 vertical horizontal is s, for d vertical, horizontal is sd.

Quantity $= (Bd + sd^2)L$

Lead and Lift

Normally earthwork is estimated for 30m lead for distance and 1.5m lift for height or depth and this distance of 30mt and the height of 1.5mt are known as normal Lead and Lift. Normal rate for earthwork is for 30m lead and 1.5m lift. For greater lead or lift the rates will be different for every unit of 30m lead and for every unit of 1.5m lift. The earthwork is therefore estimated separately for every 30m lead and for every 1.5m lift.

Problem

1) Calculate the quantity of earthwork for 200m length for a portion of a road in an uniform ground the heights of banks at the two ends being 1m and 1.6m. The formation width is 10mt and side slopes 2:1.

Ans Quantity $= (Bd + sd^2) \times$ Length

$B = 10m$, $s = 2$,

$L = 200m$

d = mean depth $= \frac{1 + 1.6}{2} = 1.3m$

Quantity $= (10 \times 1.3 + 2 \times 1.3^2) \times 200$

$= 16.38 \times 200 = 3276$ cum

2) i) Calculate the area of side slopes of portion of a bank for a length of 200mt. the heights of banks at the two ends being 2.5m and 3.5m and the ratio of side slopes are 2:1.

ii) If the side slopes are to be provided with 15cm thick stone pitching, calculate the cost of pitching at the rate of Rs 150/- per cum

Ans i) Mean height $d = \frac{2.5 + 3.5}{2} = 3m$

Slopping breadth at the mid-section $= d\sqrt{s^2+1}$

$= 3\sqrt{(2^2+1)} = 6.71$

Area of the two side slopes $= 2L \times d\sqrt{s^2+1}$

$= 2 \times 200 \times 6.71 = 2684$ sqm

ii) Quantity of pitching = Area x thickness

$= 2684 \times 0.15 = 402.6$ cum

Cost of stone pitching $= 402.6 \times 150$

$=$ Rs 60390/-

3) Reduced Level (R.L) of ground along the centre line of a proposed road from chainage 10 to chainage 20 are given below. The formation level at the 10th chainage is 107 and the road is in downward gradient of 1 in 150 up to the chainage 14 and then the gradient changes to 1 in 100 downward. Formation width of road is 10mt and side slopes of banking are 2:1 (Horizontal : vertical). Length of chain is 30mt

Draw Longitudinal section of the road and a typical cross-section and prepare an estimate of earthwork at the rate of Rs 275.00 % cum

i) Find also the area of the side slopes and the cost of turfing the side slopes at the rate of Rs 60.00 % sqm.

Chainage	10	11	12	13	14	15	16	17	18	19	20
R.L of ground	105.0	105.6	105.44	105.9	105.42	104.3	105	104.1	104.02	104	103.3

RL of formation 107.00

Gradient ← Down 1 in 150 ——→ ← Down gradient 1 in 100 ——→

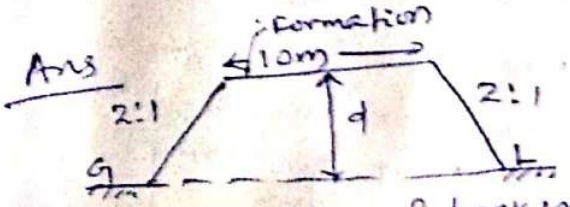

Cross section of banking

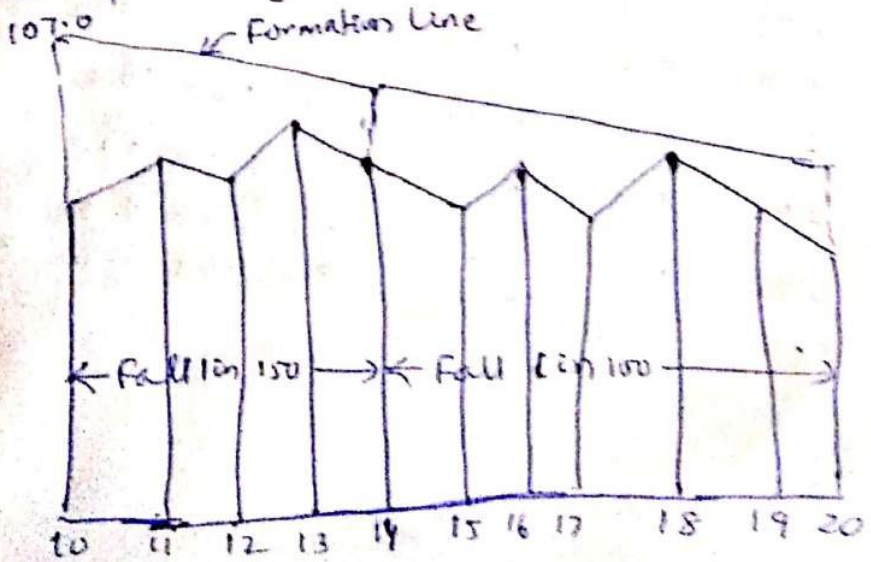

Depths of cutting

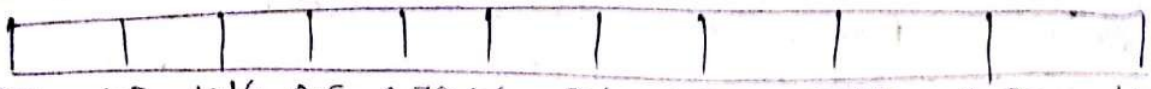

Height of bank: 2 1·2 1·16 0·5 0·78 1·6 0·6 1·2 0·38 0·70 1·10

RL of formation: 107 106·8 106·6 106·4 106·2 105·9 105·6 105·3 105 104·7 104·4

RL of ground: 105 105·6 105·44 105·9 105·42 104·3 105 104·1 104·62 104·0 102·30

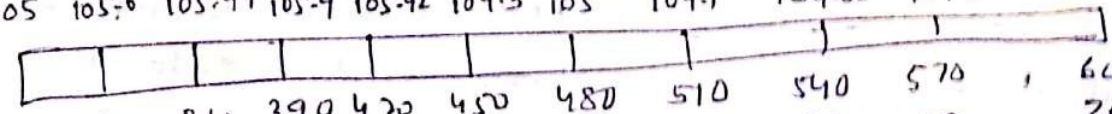

Distance in mt: 300 330 360 390 420 450 480 510 540 570 600

Chainage: 10 11 12 13 14 15 16 17 18 19 20

Station or chainage m	Length m	Height or Depth m	Mean Height m	Area Bd m^2	$3d^2$ m^2	$Bd+3d^2$ m^2	L m	$\frac{L}{6}(Bd+3d^2)$ m^3
10	300	2	-	-	-	-	-	-
			1.6	16	5.12	21.12	30	633.6
11	330	1·2		11.8	2·78	14.58	30	437.4
		1·16	1·18	8·3	1·38	9.68	30	290.4
12	360	0·5	0·83	6.4	0·82	7.22	30	216.6
13	390	0·78	0·64	11·9	2·83	14·73	30	441·9
14	420	1·6	1·19	11·0	2·42	13·42	30	402.6
15	450	0·6	1·10	9·0	1·62	10.62	30	318.6
16	480	1·20	0·90	7·7	1·25	9.15	30	274.5
17	510	0·38	0·79	5·4	0·58	5.98	30	179.4
18	540	0·70	0·54	9·0	1·62	10.62	30	318.6
19	570	1·10	0·90					
20	600							

Particulars of items	Quantity	Unit	Rate	per	cost
Earthwork in banking	3513.6	cum	275	% cum	9662.40
			Total		9662.40
Add 5% (3% for contingencies and 2% for establishment)					483.12
			Grand Total		Rs. 10145.52.

Calculation of areas of side slopes

$S = 2, \sqrt{S^2+1} = 2.236$

station or chainage	Height or Depth	Mean	$d\sqrt{S^2+1}$ m	Length L m	Area $2Ld\sqrt{S^2+1}$ m
10 —	2.0	—	—	—	—
11 —	1.2	1.60	3.58	30	214.80
12 —	1.16	1.18	2.64	30	158.40
13 —	0.5	0.83	1.86	30	111.60
14 —	0.78	0.64	1.43	30	85.80
15 —	1.60	1.19	2.66	30	159.60
16 —	0.60	1.10	2.46	30	147.60
17 —	1.20	0.90	2.01	30	120.60
18 —	0.38	0.79	1.77	30	106.20
19 —	0.70	0.54	1.21	30	72.60
20 —	1.10	0.90	2.01	30	120.60
			Total =		1297.80 cum

Turfing side slopes 1297.80 @ Rs 60.00 per sqm
= Rs 778.68

Add 5% for contingencies etc = Rs 38.93

Grand total = Rs 817.61

4) Estimate the items involved for construction of a WBM road from the following data.

Length of road = 1000m
Metalled width = 5500mm.
Thickness of the grade-I metal solving = 80mm
Wearing coat of grade-II metal 120mm loose consolidated to 80mm thick. Surface of the road is to be finished with two coats of bitumen as given below.
1st finishing coat: 12mm chips @ $0.018 m^3$ and bitumen @ 1.22kg per square meter of the road surface.
2nd finishing coat: 6mm chips @ $0.01 m^3$ and bitumen @ 1.22kg per square meter of road surface.
Consumption of fuel @ 0.40 kg per kg of bitumen.

Ans - Length of road = 1000mt
Metalled width = 5500mm = 5.5mt
Area of road surface = 5.5 x 1000 = 5500 sqmt
Thickness of grade-I metal solving = 80mm = 0.08mt
Quantity required = 5.5 x 0.08 x 1000 = 44cum
Thickness of grade-II metal 120mm loose consolidated to 80mm thick surface of road
Quantity required = 5.5 x 0.12 = 66cum

1st coat of finishing 12mm size chips @ $0.015 m^3$ per sqmt
for 5500 sqmt chips required
= 5500 x 0.015 = 9.9 cum
Bitumen required = 5500 x 1.22 kg
= 6710 kg of bitumen

2nd coat of bitumen of 6mm size chips @ 0.01 m^3 per Sqmt of road surface quantity required = 550 × 0.01 = 5.5 cum

Bitumen required @ 1.22 kg per m^2 of road surface

= 550 × 1.22 = 671 kg bitumen

For 1st coat and 2nd coat bitumen required

= 671 + 671 = 1342 kg

Consumption of bitumen @ 0.42 kg per kg of bitumen

= 1342 × 0.42 = 564 kg

4.0

PWD Accounts Work

Works or jobs can be classified into the following categories:-

(i) Major & Minor works
(ii) Petty works
(iii) Annual Repair.
(iv) Special Repair
(v) Quadrantal Repair.

→ Works are also classified according to the funding :-

(i) Petty works — upto ₹ 50,000/-
(ii) Minor works — between 50000/- to ₹ 200000/-
(iii) Major works — More than 2 lakhs.

→ Works requires approval from competent authorities. following are the four main stages which are connected with project work:-

Scanned with CamScanner

(i) Administrative Approval
(ii) Expenditure Sanction
(iii) Technical Sanction.
(iv) Appropriation of funds.

* PETTY WORKS:-

for petty works a requisition is made by the officer for whose convinience of work is required in specified form. The divisional officer reviews the requisition and provides a rough estimate of the probable cost. For the execution of work the acceptance by a responsible civil officer is mandatory, and in case the civil officer is not satisfied by the proposal then he should refer it with the divisional officer.

Scanned with CamScanner

ORIGINAL MINOR AND MAJOR WORKS :-

For civil works to be constructed by the department, it should follow some protocols :-

(i) The divisional officer is required to connect with all local officer for providing necessary data which enable him to prepare the preliminary estimate and he may deem necessary and submit the same for administrative approval to the authority.

(ii) On receiving the approval from administration, the divisional officer takes necessary steps for the preparation of a detailed estimate. It requires technical sanctions by the competent authority

(iii) After the estimate is technically sanctione the divisional officer will execute the works following the latest government protocol..

Scanned with CamScanner

REPAIR WORKS :-

Repairs are of three kinds:-

(i) Periodical:- Here the work is carried out with same quantity from time to time. i.e, white-washing, painting, new coating on metals etc.

(ii) Annual Repairs:- These repairs are not done according regulation and the quantity of work may vary. i.e, repair of damaged plaster, door replacement, glass replacement, patch repair on road surface.

(iii) Occasional or petty Repairs:- This is done from time to time as per the requirement Works which are carried out under such types are renovation, renewal of structures.

Scanned with CamScanner

Special Repair:- This same as the term occasional repair which may become necessary from time to time and which may also be prepared periodic works such as renewal of roof tops, repair of flood damage works are done under this catagory. For special repair separate ~~req~~ requisition should be prepared and get sanctioned.

Quadrennial Repair:-

Repairs which are performed every 4 months in a year ~~with~~ is called Q.R. This work does not has the same quantity and it is done during the renewal & rennovation period.
This type of work requires special permission and requisition from competent authority.

Scanned with CamScanner

→ Methods of execution of work through the contractors:-

The recognized system for execution of work through contractor is by getting engaged in an agreement or contract. "Piece-work" is also a mode where an assumed price is agreed upon without the reference to the total quality of work to be done. "Contract" includes certain rules and binding agreement between the contractor and the client. "Contract work" is mostly followed by the PWD for all major civil works. The contract is a written document which binds various conditions under the "Indian Contract Act (1872)"

Scanned with CamScanner

WORK ORDER:- This method of getting the work done is employed for doing small works upto ₹ 5000/-. This type of contract is done without calling a tender or quote. The work order is done in a prescribed term and conditions of the department.

Every department has their own printed work order books which contains the approximate quantities of different items of work, detail specification of work, time of completion of the whole work, penalties which would be imposed for not fulfilling the terms & condition given in the order.

A specimen format is provided below:

Scanned with CamScanner

Speciman of typical work order is given below :

(Book No.)

WORK ORDER No. SUB-DIVISION DIVISION

MEMORANDUM OF AGREEMENT made the ..... day of ..... between ..... son of ..... resident of ..... which expression where the context so admits includes his legal heirs, executors administrators and permitted (assigns) (hereinafter called "the contractor") of the one par and the Governor of Uttar Pradesh (which expressions where the context so admits include his successors and assigns) (hereinafter called "the Governor") of the other part.

WHEREBY THE PARTIES MUTUALLY AGREE WITH EACH OTHER AS FOLLOWS :

1. In consideration of a sum to be calculated at the rates set forth in the Schedule hereto annexed which said sum the Governor hereby agrees to pay to the contractor within-months after the said contractor has completed the works in accordance with the Schedule of works and Special Instruction hereto attached and the Standard Specification

of the Irrigation Department, U.P., the same, to be read part of this agreement, the contractor hereby agrees that all the works shall be executed with great promptness, care and accuracy in a workmanlike manner and shall be completed within months from the date of these presents.

2. The contractor shall use materials of the best quality and shall take articles of Government stock after giving a due receipt and shall use them carefully. In case of nonavailability of any article in Government stock the contractor shall use the material conferming to the Standard Specifications of the Irrigation Department, U.P.
3. If the Governor shall make the solid contract or any payment on account during the execution of the said works he shall be entitled to deduct the same from such sum as is found to be payable to the contractor on completion of the work as aforesaid. From all bills of payment on account a deduction at the rate of 10 percent on their total value will be made, which deductions will be refunded to the contractor in the final payment to be made on the completion of the work as aforesaid.
4. If the ..... shall at any time during the progress of the work be dissatisfied with the rate of progress or the quality of the materials that have been used or of the workmanship be the said may without notice immediately determine this agreement and all in other contractor or employ daily labour to dismantle bad work if necessary and to renew and complete the said works and may pay the cost of such contractor of daily labour for such dismantling, renewing or completion out of such sums as are or would have been payable under this agreement to the contractor or the balance of that sum if payments on account of work done have been made to the contractor and if such cost be more than such sums or the balance of such sum the difference between it and such sum or balance shall be as debt due from the contractor to the Governor and shall be recoverable as such.
5. If the contractor fails to complete as aforesaid the said works by the time fixed in this agreement for completion, the Governor may dedut from the sum found to be payable under this agreement or the balance of the sum then unpaid the sum of Rs for every day that shall elapse between the day fixed for completion and the day of actual completion if action has not been taken under Clause thereof, subject to the maximum penalty of 10 percent of the work order.
6. (1) The contractor will indemnify the Governor from all claims for injury caused to any person whether a workman or not while in or upon the works or the site of the same and the Governor shall not be bound to defend any claim brought under the Workmen's Compensation Act(VIII of 1923) or any of its subsequent amendment unless the contractor makes a written request for the same and first deposits with the Governor a sum which the Governor deems sufficient to meet any liability which the Governor might incur by reason of defending any such claim.

   (2) The Governor shall further be entitled to recover the amount so paid by way of compensation under the aforesaid. Act or any part thereof by deducting the same from the security money deposited by the contractor from any other sum due by him to the contractor under this agreement or on any other account what so ever. Not with standing anything stipulated in the aforesaid clauses the Governor shall have power to remain any sum due to the contractor(s) and set off all claims against him (them) whether arising out of the particular contract or out of any other transactions or contract held by him (their) alone or in partnership with others.

   (3) Every dispute, difference or question which may at any terms during the continuance of this agreement or after its termination from any cause whatsoever arise between the parties hereto any person claiming under them touching or arising out or in respect of the same, or the subject matter thereof shall be referred to the arbitration of the Executive Engineer of the ..... and the decision of the arbitrator shall be final binding on the parties.

IN WITNESS WHERE OF ..... and ..... on behalf of the Governor and acting under his authority in this behalf have signed this deed hereunder on the dates mentioned under their respective signatures.

Signature of the contractor

Witness (1)

Witness (2)

Signature of Sub-Divisional Officer on behalf of Governor of Uttar Pradesh

Types of Contract :-

(i) Lump-sum Contract :-

In this type of contract, the contractor undertakes the construction work or the execution of the specified work and complete it in all respect for a fixed money. The design, shape and material are as per the contractor. The detailed specification of the item of work, drawings, plan etc are to be provided by the owner / client. In case of lump sum contract the quantities of different items of work are not provided. The contractor shall have to complete the work as per plan and specification within a fixed time.

(ii) Item rate Contract :-

In this type of contract, the contractor takes work on item rate basis. The payment is done on the basis of quantities of item done and their respective rates. The approximate quantity of all possible item of work are worked out and are shown in tender form. This is the most common type of contract system. Here addition and alterations in the detailed plan and specification can be easily made at any stage. This method is the most economical of all also.

Scanned with CamScanner

Percentage - Contract :-

In this type of contract, the contractor agrees to take the work of construction for a fixed percentage over the actual cost of construction. This type of contract is given when no contractor is agreeing to do the work due to uncertainities and fluctuation in market rates. The architects and chartered Engg also take works under this method.

The state engineering departments also undertake the work for private persons and usually charge 12-14% for the preparation of estimates, plan and supervision charges

* Labour contracts :-

In cases where the owner purchases the material and give the labour work on contract only. This contract engages the labour and gets the work done as per the specification, drawing and instructions of the owner. After completion of work, a detailed measurement of the items are done and then the payment is made to the contractor. The labour contractor has to use its own tools for working but plants and machines are arranged by the owner.

Scanned with CamScanner

* Piece-work agreement:- This is an agreement between the labour and the owner for providing a fixed amount for a type of work done which is not time bound.

* Scheduled Contracts:- Such contracts are generally time-bound and payment is done only when the work is completed within the time reference.

* Cost plus fixed percentage contract:-

In this type of contract, the contractor is provided a fixed percentage extra money for providing his services. On completion of the work within the specific time frame, the owner gives the amount and in addition also gives an extra percent amount to the contractor.

Scanned with CamScanner

Accounts of works :-

* Administrative approval :- When a work order is generated by the divisional officer the content is forwarded to the higher authority. After review the authority provides its consent for proceedings. This is known as administrative approval.

* Technical Sanction :- It is a consent provided by the technical authority on various technical aspects provided or available in the work order.

* Contingency budget :- It is an amount of money which is included to cover potential events that are not specifically accounted for in a cost estimate. It is generally available to compensate the uncertainty inherent expenditures.

* Notice Inviting tender :- It is a documented tender which provides information regarding the upcoming project like drawings, specification, expenses, time of completion and other terms and condition.

Scanned with CamScanner

* Quotations :- These are documents which contains the detailed information which is required by the authority for review. It is provided in a formal and generally contains information like specifications, expenses, price of products & items.

* Earnest Money :- It is the amount which accompanies the tender form while submitting it. It is usually 1% to 2% of the total estimated cost of the work. The main objectives of collecting earnest money with the tender forms are :-

(i) Restriction on unnecessary competitions.
(ii) Punishment
(iii) Compensation.

* Security deposit :- After calling the tenders, they are scrutinized and the owner department accepts the reasonable tender usually the lowest. After accepting the tender, the contractor whose tender is accepted is asked to deposit an amount usually 2 - 10% of the total estimated cost of work as security. This amount is retained by the owner until the work or project is completed.

Scanned with CamScanner

No ..... of 19

PIECE-WORK AGREEMENT

District ..... Division .....

Name of work ..... Name of party tendering .....

I hereby agree to execute the undermentioned description of work by piece work and in accordance with the conditions noted below in considerations payment being made by the Executive Engineer ..... Division for the quantity of work executed at the rates specified in the following schedule.

Sub-divisional officer

following schedule.

Name of work	Number of Item	Class and description of work to be executed	Unit of calculation	Rate of payment	

Advance payments:-

Generally advances to contractor is prohibited, but in exceptional cases it is permitted. Sometimes the contractor requires some advance on the security of materials brought to the site. In such cases advance upto an amount of 25% of the current value of material is provided under certain conditions.

Intermmidiate payments are provided to the contractor on finished work on approval of competent authority Such payments are done on exceptional conditions.

final payments are made on after the handover of the project site. A detailed review and scruting is made on the finished work, where the work should comply with the specifications and requirements. On completion of the project and proper scrutiny the amount is released.

A proper running bill, is a documents which is a mode for payment for completing the work. Running bill are passed on the consent of competent authority.

A format of all the above is provided below:-

Scanned with CamScanner

Form 24- First and Final Bill

(For contractors and suppliers- to be used when a single payment is made for a job or contract i.e. only on its completion).

Name of work (in the case of bills for work done)..... Cash Book Voucher No ..... Dated .....

Division..... District.....

Name of contractor or supplier and reference to agreement	Items of work or supplies grouped under 'sub heads' and sub-works of estimate	Reference to recorded measurements and date			Qty.	Rate	Unit	Amount		Total amount payable to the contractor to supplier		Payee's dated signature in token of (1) acceptance of bill and (2) acknowledgement of payment	Dated signature of witness	Dated certificate of disbursement	
										In figures	In words			Mode of payment in cash or cheque number and date	Paid by me
		Book no.	Page no.	Date		₹		₹	P.	₹ P.					
		Total													

Date ..... 19 Signature officer preparing the bill for payment Pay Rs. in cash and Rs. (.....) by cheque, Dated .....019. Signature Officer authorizing Divisional Officer Division Rank.....payment

In the case of payment to suppliers a red ink entry should be made across the page above the entries relating thereto, in one of the following forms applicable to the case–(1) "Stock" (2) "Purchase-For "Stock" (3) "Purchase for direct issue to work ..... ", (4) "Purchase for the work ..... for issue to contractor".

*In case of works the account of which are kept by sub-heads the amounts relating to all items of work tailing under the same "sub-head" should be totalled in red ink.

Payments should be attested by some known person when the payee's acknowledgement is given a mark, seal or thumb-impression.

The person actually making for payment should initial (and date) in the column against each payment.

This signature is necessary only when the officer authorizing payment is not the who prepares the bill.

For use in Divisional office	For use in Accountant General's Office
Checked	Computed Classification Reviewed checked Checked with Schedule of rates/ checked with the rates as per agreement
Accounts Clerk *Divisional Accountant*	*Audited Auditor.* *Superintendent* *Reviewed Gazetted Officer*

Scanned with CamScanner

Work-charged Establishment:-

Payments to work charges establishment is done in the following methods:-

Pay bill:-

Wages are drawn and paid on form no. 29, which is a combined pay bill and acquittance roll form. A consolidated bill on this form is prepared monthly either for the whole division, sub-division or any section.

Unpaid Wages:-

Wages remaining unpaid on a pasced bill on the date fixed for the closing of the accounts of the month may be paid subsequently when claimed using form 31-B. Subsequent payment should be made on hand receipt.

Travelling Expenses:- All payments of travelling expenses are directly on the hand receipt form No. 28 which should be set forth all the necessary particulars of the journey performed and the expenses claimed.

Scanned with CamScanner

FORM 26-Running Accounts Bill

For Contractors : This form provides for (1) Advance payments, (2) Secured advances, and (3) Payments for measured works.

Cash-book voucher no. dated 198

Name of Contractor-

Name of work-

Serial no. of this Bill-

No. and date of his previous bill for this work-

Reference to agreement-

I-Account of work executed

Advance payment for work not yet measured			Item of work grouped under "Sub-heads" and "Sub-work" of estimate	Unit	Rate	Quantity executed up to date as per measurement book	Payment of the basis of actual measurements.		Remarks (with reasons for delay in adjusting payment show in column 1)
Total as per previous bill	*Since previous bill	Total up to date					Up to date	‡Since previous bill	
1	2	3	4	5	6	7	8	9	10
₹	₹	₹	₹		₹	₹	₹	₹	
	(D)	(B)	Total	Total value of work done to date (A)....					
Figure (D) in words Rupees			Deduct value of works shown on previous bill... Net value of work since previous bill (F) Figure (F) in words Rupees						

Where there is an entry in column 9 on basis of actual measurement, the whole of the amount previously paid without a detailed measurement should be adjusted by *Minus* entry in column 2 equivalent to the amount shown in column 1, so that the "Total up to date" in column 3 may become *"Nil"*.

‡When there are one or more entries in column 9 relating to each sub-head of estimate they should in the case of work the amounts which are kept by sub-heads be totalled and the total recorded in column 10 for posting the work abstract.

(Continued.....)

II-Account of "Secured" advanced allowed on the security of materials brought to site

Quantity outstanding from previous bill	Deduct quantity utilized in work measured since previous bill	*Quantity outstanding including quantity brought to site since previous bill			Unit				
1	2	3	4	5	6	7	8	9	10
			₹			₹	₹	No. date	
Total amount outstanding as per this account								(C)	
Deduct amount outstanding as per entry (C) at previous bill									
Net amount since previous bill in words								(E)	

*Entries relating to each description of materials should be posted thus in column 3. First enter the difference between the quantities in columns 1 and 2, then show below the entry the quantities, if any, brought to site against which a further advance has been authorised this entry being prefixed by the *plus* sign. Finally strike the total of the two entries, which will represent the total quantity outstanding.

†Entries in column 8 show the money, values of the total quantities outstanding as per column 3.

'Full rate assessed by the Divisional Officer

Redused rate which advance is made

Description of materials

†Up to date amount of advance

* Temporary Advance accounts:-

When a disbursing officer makes a remittance to a subordinate officer to enable him to make a number of specific petty payment on a muster Roll or other voucher which has already been passed for payment, the amount remitted should be treated as a temp-orary advance. Such accounts should be closed as soon as possible.

* Cash book :- All the transaction relating to the actual receipt and payment of cash are recorded in the book known as "cash book". It is the most important record which is maintained daily in the S.D.O and divisional office. The cash book contains two money columns headed "cash" and "Bank or Treasury".

Every entry into the cash book shall be concise. The date, number of voucher, name of work and brief narration is unmistakeably indicated.

* Suspense account:-

It is an account in the records of an organisation in which items are temporarily entered before the allocation to the correct and final account.

Scanned with CamScanner

Form 1 — Cash Book

Receipt side *Payment side*

Date of Receipt	No. of Voucher or Receipt	From whom Received	Amount (Cash)	Classification of receipts	Date of payment	No. of Voucher	To whom paid etc.	Payments			Classification of Charges
								Cash	Bank or treasury		
									Number of Cheque with no. of cheque Book	Amount	
1	2	3	4	5	6	7	8	9	10	11	12

* Book transfer:-

It is the transfer of funds or asset ownership from one account to another in the same financial institution.

* "Voucher" is a small printed piece of paper that entitles the holder for an accounting representing an internal intent to make payment. It may be considered as transaction type of monetary value.

* Measurement Book:-

Payments for all work done which is susceptible of measurement and for all supplies are made on the basis of measurement recorded in measurement books. The measurement books available with the department at machine numbered serially and a register is maintained in the prescribed form showing the serial number of each book, the names of the sub-division to which issued, date of issue, date of return etc.

Scanned with CamScanner

Measurement Book

S.No.	Particulars	Details of Actual Mesuremcnt				Contents or Area
		No.	L.	B.	H or D	

* Daily Labour or Muster Roll System:-

When the work is carried out by the department directly by employing the daily labour such as masons, beldar, carpenter, coolies, blacksmith, plumber etc, it is known as Daily labour or muster Roll system

All the material required for the construction are issued from stores or purchased directly chargeable to the concerned work.

The attendance of the Labourers is maintained in a muster roll in form 21. Periodic inspection by the higher authority is done in order to check the actual number of labour working.

On the basis of muster roll payment is made to the labour.

Muster roll should never be made in duplicate and the entries made is such that it cannot be interpolated or altered.

Labours are paid in weekly, fortnightly or monthly format by refering to the muster roll.

Scanned with CamScanner

* Acquaintance Roll :-

It is a receipt in evidence of payment in a prescribed form having columns such as item number, name, designation, Net Income. etc..

This kind of document is necessary to maintain all accounts and registers including pay bill registers.

It is also helpful while preparing budget estimates for future works as well as to revise the estimates. or amount incurred during transaction.

Stores :-

It means that all articles and materials purchased or acquired for the use of government. It includes issuable items, dead stock of nature of plants, machinery instruments, equipments, fixtures etc.

The stores are classified on to the following categories:-

(i) General store

(ii) Tools & Plant

(iii) Road metal

(iv) Materials used direct to work.

Scanned with CamScanner

* Receipt of stores :-

Materials may be received on the stock from the following sources :-

(i) Supplier

(ii) Other sub-divisions, departments

(iii) Manufacture

(iv) Work & building.

In all the cases, there should be proper authority for the receipt by the storekeeper or the concerned officer of materials to be brought on stock.

Issue of material from stock :-

Materials from stock may issued for :-

(i) Use on works either by issue to contractor or direct.

(ii) Despatch to other sub-division

(iii) Sale to contractor, employee, other person.

Scanned with CamScanner

Receipt

Form 8-Register of Stock .....

Issues

Division .....

Sub-division.....

Section .....

Month .....

Date	Reference to record measurement (for receipts only) and to indents or order	*Source from which received *To whom issued (with name of work and of contractor to whom chargeable	Head of account	Name of articles

*Score out the upper or lower line as required.

Form No. 8-A

Stock Receipts

Register of daily Transactions of ....

Tools and plant Issues

Division .....

Sub-division.....

Section .....

Month .....

Date	Reference to record measurement (for receipts only) and to indents or order	*Source from which received / *To whom issued (with name of work and of contractor to whom chargeable	Site at which transaction occurred	Head of account etc.	Name of articles
					unit

These receipts are the proof of the materials issued to the contractors, unstamped receipt form is given below :

Unstamped Receipt

Name of work .....

Name of Contractor ..... Contract Bond No.....

S.No.	Name of materials	Quantity	Rate	Cost	Remarks

Signature of issuing officer .....

Date .....

Received materials as above

Signature of Contractor .....

Date .....

Form 10 – Abstract of Stock Issues

Division .....

Sub-division.....

Month.....

*On what account issued	Total (separately for each sub-head)		₹ P.	Grand Total
	Amount separately for each article		₹ P.	
	Rate		₹ P.	
	Value of materials expanded upon each item	**Total	Name of article (grouped by sub-head)	
			Qty.	
	₹ P.	₹ P.		

Grand Total

*Quoting date of receipt of cash or number of transfer entry, in respect of items brought to account through the cash book or the transfer entry book vide rule 2 to paragraph 186.

**These Totals should agree.

Dated _____ Sub-Divisional Officer

Divisional Accountant

Form 7-Indent for Store
Counterfoil

Indent No. _____
ON _____
Date _____

Description	Number or quantity	Head of Account etc.	Name of work (with name of Contractor from whom value is recoverable)

The stores should be delivered / despatched to

Identing Officer
(Divisional or
Sub-divisional Officer)

Form 7-Indent for Store
Indent

Indent No. _____
ON _____
Date _____

Description	Number or quantity	Head of Account etc.	Name of work (with name of Contractor from whom value is recoverable)

The stores should be delivered / despatched to

Identing Officer
(Divisional or
sub-divisional Officer)

Certificate of Supply

This indent has (not) been complied with in full _____ (The alterations, which I have tested, have accordingly been made by me)
Delivered
_____ to _____ on _____ by _____
Despatched
Dated _____

Supplying Officer

Form 7-Invoice
Invoice of Stores Supplied

To _____
By _____
On Indent No. _____ Date _____
Issued by the _____

Description	Number or quantity	Head of Account etc.	Name of work (with name of Contractor from whom value is recoverable)

Dated _____
* Received _____ Supplying Officer
Dated _____
Receiving Officer

* In the case of issues to contractors and private persons this acknowledgement should set forth all the particulars mentioned in the paragraph _____ of the P.W.D. Rules.

Form 11 – Half Yearly Balance Return of Stock

Division _____

Sub-division _____

Period _____ April to September / October to March

Class	Item No.	Name of articles	Unit	Issue Rate	Balance brought forward	Receipts						Total Receipt and balance	Issues						Total Issues	Closing balance carried forward	Remarks	
																					By sub-divisional Officer	By divisional Officer
1	2	3	4	5	6	7	8	9	10	11	12	13	14	15	16	17	18	19	20	21	22	23

Certificate—Certified that with the exceptions noted, the articles shown in this return have, during the year ending ..... been counted by me or by the person named below .....

Dated .....

Signature of Sub-divisional Officer

Signature of Divisional Officer