1. Friction Loss/Darcy Weisbach Equation

- Darcy Weisbach equation

$$h_f = \frac{fLV^2}{2gD} = \frac{4f'LV^2}{2gD}$$

L = Length of pipe

D = Diameter of pipe

V = Mean velocity of flow

f = Friction factor (0.02 to 0.04 for metals)

f' = Friction coefficient

h_f = Head loss due to friction

- For laminar flow

$$f = \frac{64}{\text{Re}} \quad [\text{Re} < 2000]$$

- Friction factor is inversely proportional to diameter of pipe.
- Turbulent flow

$$f = \frac{0.316}{\text{Re}^{1/4}} \quad [4000 < \text{Re} < 10^6]$$

- Friction factor $\propto \dfrac{1}{(\text{diameter of pipe})^{1/4}}$
- Friction loss in pipe whose end is closed and flow takes place through sides at regular interval

$$h_f = \frac{1}{3}\frac{fLV^2}{2gD}$$

2. Chezy's Formula

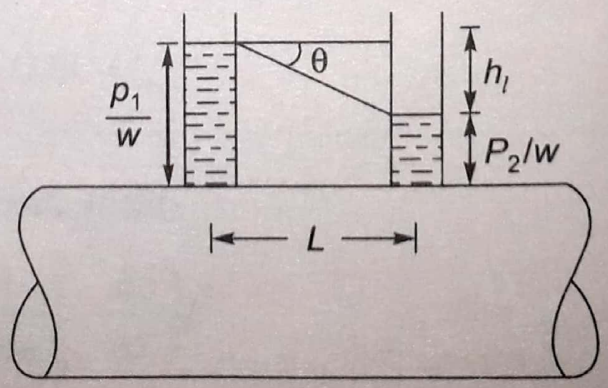

Scanned by CamScanner

$V = C\sqrt{mi}$

C = Chezy's constant

m = Hydraulic mean depth

$$= \frac{\text{Area}}{\text{Wetted perimeter}}$$

$$i = \text{Hydraulic slope} = \frac{h_L}{L} = \tan\theta$$

- Relation between Chezy's constant and friction factor.

$$f = \frac{8g}{C^2}$$

3. Different Type of Minor Losses in Pipe

- Losses due to sudden expansion

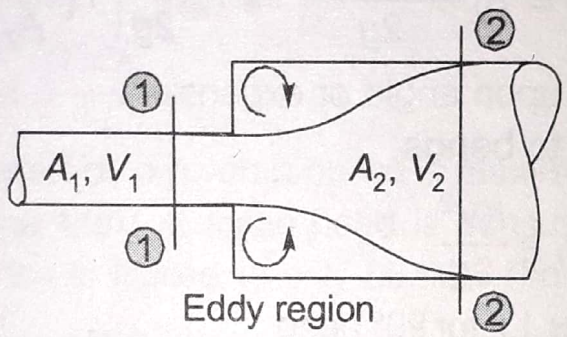

$$h_e = \frac{(V_1 - V_2)^2}{2g} = \frac{V_1^2}{2g}\left(1 - \frac{A_1}{A_2}\right)^2$$

Remember:

☑ For sudden expansion, the optimum ratio of diameters of the pipe so that the pressure loss is minimum.

$$\frac{d_1}{d_2} = \frac{1}{\sqrt{2}}$$

- Losses due to sudden contraction.

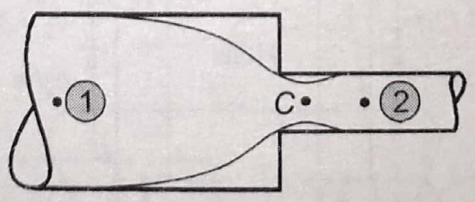

$$h_c = \frac{(V_c - V_2)^2}{2g} = \frac{V_2^2}{2g}\left(\frac{1}{C_c} - 1\right)^2$$

Coefficient of contraction $(C_c) = \frac{V_2}{V_c}$

Scanned by CamScanner

If C_c is not given

$$h_c = \frac{0.5V_2^2}{2g}$$

- **Losses at exit of pipe**

$$h_o = \frac{V^2}{2g}$$

- **Losses at entrance to pipe**

$$h_i = \frac{0.5\,V^2}{2g}$$

Here, V = **Mean** velocity of flow in pipe

- **Loss due to gradual expansion**

$$h_L = K_L \frac{(V_1 - V_2)^2}{2g} = K_L \frac{V_1^2}{2g}\left(1 - \frac{A_1}{A_2}\right)^2$$

K_L depends upon angle of expansion.

- **Losses due to bends**

$$h_l = \frac{KV^2}{2g}$$

$K \simeq 1.2$ for 90° bend

$K \simeq 0.4$ for 45° bend

4. Hydraulic Gradient Line (HGL) and Total Energy Line (TEL)

HGL: It joins Piezometric head $\left(\frac{p}{w} + z\right)$ at various points.

TEL: It joins total energy head at various points

$$\left(\frac{p}{w} + z + \frac{V^2}{2g}\right)$$

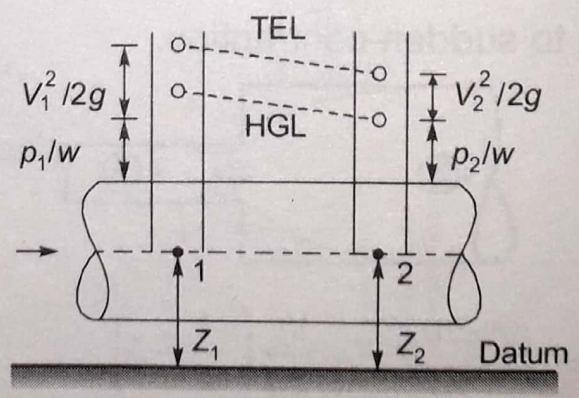

Remember:

☑ HGL is always parallel and lower than TEL.

Scanned by CamScanner

5. Power Transmission Through Pipe

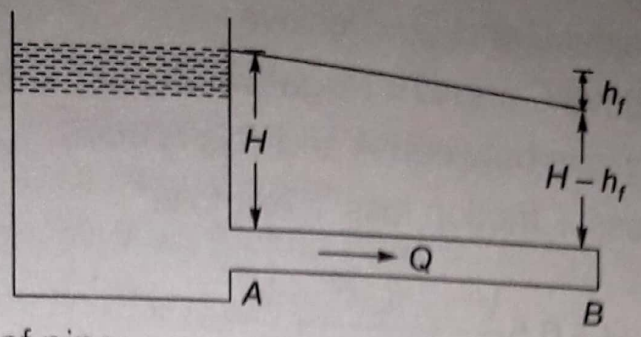

Power at inlet of pipe;

$$P_i = \rho g Q H$$

Power at outlet of pipe;

$$P_o = \rho g Q (H - h_f)$$

where h_f = Head loss due to friction

Efficiency: $$\eta = \frac{P_o}{P_i} = \frac{\rho g Q (H - h_f)}{\rho g Q H}$$

$$\eta = \frac{H - h_f}{H}$$

- Power delivered by a given pipeline is **maximum** when the flow is such that **one third** of static head is consumed in pipe friction. Thus efficiency is limited to only 66.66% (For η_{max}, $h_f = H/3$).

6. Siphon Action of Pipe

A pipe which raises above its hydraulic grade line has negative pressure and is known as a siphon.

- Formation of air lock at highest portion of pipe.

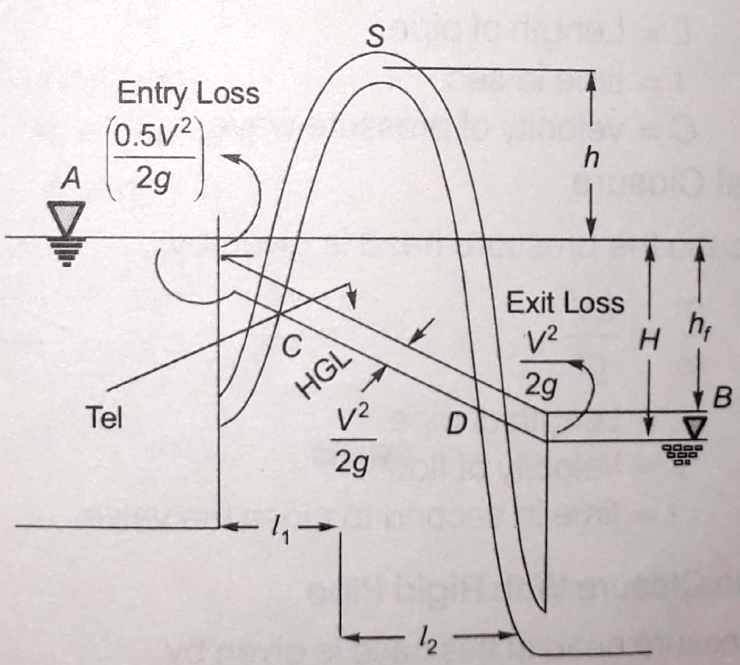

- Summit pressure (p_s) should not be less than vapour pressure of liquid to avoid air lock formation at summit.
  (For water it is 2.5 m at 20°C)

Scanned by CamScanner

- Pressure at C and D = atmospheric pressure
- Pressure below C and D = Positive
- Pressure above C and D = Negative (Suction pressure).
- It total head loss between A and B is H then,

  H = entry loss + friction loss + exit loss

$$H = 0.5\frac{V^2}{2g} + \frac{fLV^2}{2gD} + \frac{V^2}{2g} \quad \text{...(i)}$$

- If h is height of summit above reservoir A, then by applying Bernoulli's equation between A and S,

$$\frac{p_A}{w} = \left(\frac{p_s}{w} + h\right) + \frac{V^2}{2g} + 0.5\frac{V^2}{2g} + \frac{fl_1V^2}{2gD} \quad \text{...(ii)}$$

From (i) and (ii) p_s and h can be calculated.

7. Water Hammer in Pipe

- There are three cases of water hammer
  (i) Gradual closure of valve
  (ii) Sudden closure of valve and pipe is rigid
  (iii) Sudden closure of valve and pipe is elastic
- The valve closure is gradual if $t > \frac{2L}{C}$
- The valve closure is sudden if $t < \frac{2L}{C}$

where, L = Length of pipe
t = time in sec.
C = velocity of pressure wave

- **Gradual Closure**

  In this case the pressure head is given by

$$\frac{p}{w} = \frac{LV}{gt} \quad \text{...(i)}$$

where, L = Length of pipe
V = Velocity of flow
t = time in second to close the valve.

- **Sudden Closure With Rigid Pipe**

  The pressure head in this case is given by

$$\frac{p}{w} = \frac{VC}{g} \text{(Allievi formula)} \quad \text{...(ii)}$$

Scanned by CamScanner

where, $C = \sqrt{\frac{K}{\rho}}$ = Velocity of pressure wave

K = Bulk modulus of water

ρ = Density of water.

- **Sudden Closure With Elastic Pipe**

The pressure head is given by:

$$\frac{p}{w} = \frac{V}{\sqrt{\rho g^2 \left(\frac{1}{K} + \frac{D}{tE}\right)}} \quad \text{...(iii)}$$

where,

D = Diameter of pipe

t = Thickness of pipe

E = Modulus of elasticity of pipe material

(In deriving equation (iii), the Poisson's ratio of pipe material is assumed as 0.25.)

8. Equivalent pipe length

- Series connection

$$q = \text{constant}$$

$$H_{eq} = H_1 + H_2$$

$$\frac{L_{eq}}{D^5} = \frac{L_1}{D_1^5} + \frac{L_2}{D_2^5}$$

- Parallel connection

$$H_f = \text{constant}$$

$$q = q_1 + q_2$$

$$\frac{D_{eq}^{5/2}}{\sqrt{L_{eq}}} = \frac{D_1^{5/2}}{\sqrt{L_1}} + \frac{D_2^{5/2}}{\sqrt{L_2}}$$

■■■■

Scanned by CamScanner

Flow in Pipes and Ducts

* Loss of Energy in pipes :-

Energy losses

1. Major Energy losses
   - Due to friction and it is calculated by:
   - (a) Darcy-Weisbach formula :- $\boxed{h_f = \frac{4flv^2}{2gd}}$
   - (b) Chezy's formula :- $\boxed{V = C\sqrt{mi}}$

     $C = \sqrt{\frac{8g}{f'}}$ = Chezy's constant

     $m = \frac{A}{P} = \frac{\pi/4\, d^2}{\pi d} = \frac{d}{4}$ = hydraulic mean depth

     $i = \frac{h_f}{L}$ = Loss of head per unit length of pipe

     V = Velocity of flow through the pipe

     A = Area of flow

     P = wetted perimeter

     $h_f = \frac{f'}{8g} \times \frac{P}{A} \times L \times V^2$

     $\frac{f'}{8} = f/2$, f = coeff. of friction

2. Minor Energy losses due to
   - (a) Sudden expansion of pipe $\boxed{h_e = \frac{(V_1 - V_2)^2}{2g}}$
   - (b) Sudden contraction of pipe $\boxed{h_c = 0.5 \times \frac{V_2^2}{2g}}$
   - (c) Bend in pipes $\boxed{h_b = \frac{KV^2}{2g}}$ (K = depends on θ, r, d of pipe)
   - (d) Pipe fittings $\boxed{h_f = \frac{KV^2}{2g}}$

* Expression for loss of head due to friction in pipes :-

$$\frac{P_1}{\rho g} + \frac{V_1^2}{2g} + Z_1 = \frac{P_2}{\rho g} + \frac{V_2^2}{2g} + Z_2 + h_f$$

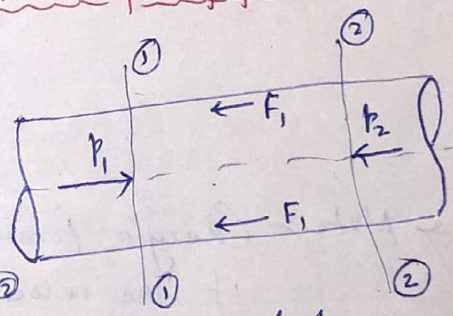

$\Rightarrow \frac{P_1}{\rho g} = \frac{P_2}{\rho g} + h_f$ $\left\{ \because Z_1 = Z_2,\ V_1 = V_2 \right.$ as dia. is same at ① and ②

$\Rightarrow h_f = \frac{P_1 - P_2}{\rho g}$ = head lost due to friction and hence intensity of pressure will be reduced in the direction of flow by frictional resistance. —— ①

So, frictional Resistance = frictional resistance per unit wetted area per unit velocity × wetted area × velocity²

$\Rightarrow F_1 = f' \times \pi d L \times V^2$

$= f' \times P \times L \times V^2$

$\left[\because \text{wetted area} = \pi \times d \times L,\ \text{velocity} = V_1 = V_2 = V,\ \text{Perimeter} = P = \pi d \right.$

Again $P_1 A - P_2 A - F_1 = 0$ (Resolving forces along horizontal dir^n)

$\Rightarrow (P_1 - P_2) A = F_1 = f' \times P \times L \times V^2$

$\Rightarrow P_1 - P_2 = \frac{f' \times P \times L \times V^2}{A} = h_f \rho g$, from eq^n ①

Scanned by CamScanner

$$\Rightarrow h_f \rho g = \frac{f' P L V^2}{A}$$

$$\Rightarrow h_f = \frac{f'}{\rho g} \times \frac{P}{A} \times L \times V^2$$

Here, $\frac{P}{A} = \frac{\pi d}{\pi/4\, d^2} = \frac{4}{d}$ and $\frac{f'}{\rho} = \frac{f}{2}$, if f = coeff of friction

(a) $\therefore$ $\boxed{h_f = \frac{4 f L V^2}{2 g d}}$ — (2) Darcy-Weisbach Eq^n.

f is known as friction factor.

(b) Chezy's formula from Darcy-Weisbach Eq^n :-

$$h_f = \frac{4 f L V^2}{2 g d} = 4 \times \frac{f}{2} \times \frac{L V^2}{g} = \frac{4}{d} \times \frac{f'}{\rho g} \times L V^2 \quad \text{— (3)}$$

If $m = \frac{A}{P} = \frac{\text{Area of flow}}{\text{wetted perimeter}} = \frac{\pi/4\, d^2}{\pi d} = \frac{d}{4} \Rightarrow \frac{1}{m} = \frac{4}{d}$ — (4)

From eq^n (3) and (4)

$$h_f = \frac{1}{m} \times \frac{f'}{\rho g} \times L V^2 \Rightarrow V^2 = h_f \times \frac{\rho g}{f'} \times m \times \frac{1}{L}$$

$$\Rightarrow V^2 = \frac{\rho g}{f'} \times m \times \frac{h_f}{L}$$

$$\Rightarrow V = \sqrt{\frac{\rho g}{f'}} \times \sqrt{m \times \frac{h_f}{L}}$$

$$\Rightarrow \boxed{V = C\sqrt{mi}} \quad \text{— (5)}$$

Chezy's formula

if C = Chezy's constant $= \sqrt{\rho g / f'}$

$i = h_f / L$ = head lost per unit length

→ Note :- Chezy's formula can be obtained if the velocity of flow through pipes and also the value of Chezy's const. C is known. The value of m for pipe $= d/4$.

→ Note :- In Laminar flow, loss of pressure head was found to be proportional to velocity.

In case of turbulent flow, Reynold observed that loss of head is approximately proportional to the square of velocity.

$h_f \propto V^n$, n varies from 1.75 to 2.0

Scanned by CamScanner

* Hydraulic Gradient Line (HGL) :-

The line which gives the sum of pressure head (P/w) and datum head (z) of a flowing fluid in a pipe w.r.t some reference line or it is the line which is obtained by joining the tops of all vertical ordinates showing the ~~top~~ pressure head P/w of a flowing fluid in a pipe from the centre of the pipe.

* Total Energy Line (TEL) :-

The line which gives the sum of pressure head, datum head and kinetic head of a flowing fluid in a pipe w.r.t some reference line.

OR

It is the line obtained by joining the tops of all vertical ordinates showing the sum of pressure head and kinetic head from the centre of the pipe.

→ Example (Q) Draw the HGL and TEL in the following fig.

If $L = 50m$ $d = 200mm = 0.2m$

$H = 4m$ $f = 0.009$

$V = 2.734\ m/s$

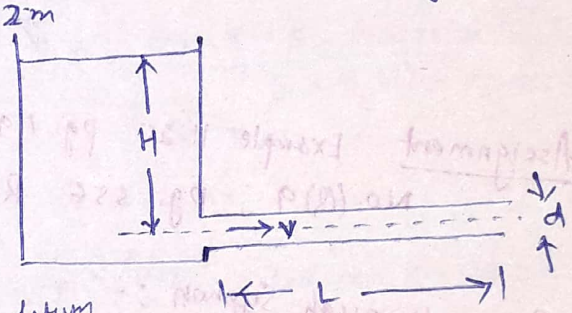

Sol^n Total Energy Line (TEL)

1. Total Energy at A [Take datum as centre of pipe BC]

$= \frac{P_A}{\rho g} + \frac{V_A^2}{2g} + Z$

$= 0 + 0 + 4 = 4m$

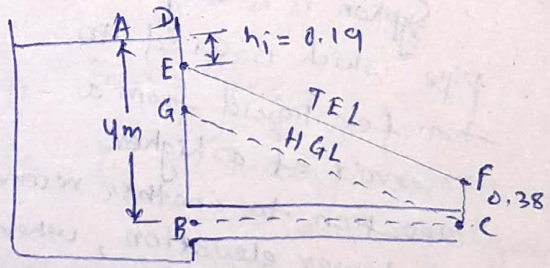

2. Total Energy at B

= Total Energy at A − h_i

$= 4m - 0.19m$

$= 3.81\ m$

h_i = Head lost at entrance of pipe

$= 0.5 \times \frac{V^2}{2g}$

$= 0.5 \times \frac{(2.734)^2}{2 \times 9.81} = 0.19\ m$

3. Total energy at C

$= \frac{P_C}{\rho g} + \frac{V_C^2}{2g} + Z_C$

$= 0 + \frac{V^2}{2g} + 0$

$= \frac{(2.734)^2}{2 \times 9.81} = 0.38\ m$

Scanned by CamScanner

(a) The point D represents total energy at A

(b) " " E, where DE = h_i = 0.19, represents total energy at inlet of the pipe

(c) Point F, where CF = 0.38 represents total energy at outlet of pipe

Joining D to E and E to F, DEF represents T.E.L

→ Hydraulic Gradient line (H.G.L)

H.G.L gives the sum of $P/w + Z$ w.r.t datum line

So, Substracting $\frac{V^2}{2g}$ from total energy line at outlet we shall get point C. from C, draw a line CG parallel to EF. Then line CG represents Hydraulic gradient line.

Extra And head lost due to friction $h_f = \frac{4fLV^2}{2gd}$

$$\Rightarrow h_f = \frac{4 \times 0.009 \times 50 \times (2.734)^2}{2 \times 9.81 \times 0.2}$$

$$\Rightarrow h_f = 3.428 \text{ m}$$

→ Assignment Example 11.25 pg. 494 FMHM, R.K. Bansal
No. (Q) 9, pg. 556 R.K. Bansal

* Flow through Syphon :-

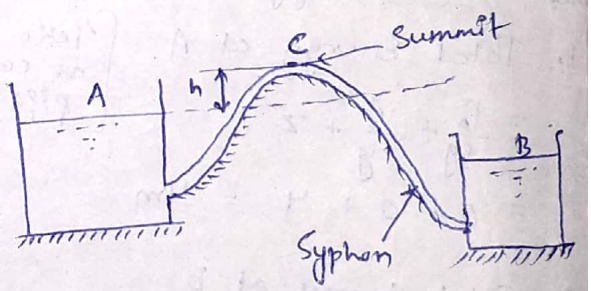

Syphon is a long bent pipe which is used to transfer liquid from a reservoir at a higher elevation to another reservior at lower elevation, when the two reservoirs are separated by a hill or high level ground.

The point C is the highest level of the syphon called summit.

Pressure at C will be less than atmospheric pressure (b'coz C is above the free surface of water in tank A)

Theoritically pressure at C may be reduced to −10.3 m of water

Practically pressure at C is only −7.6 m of water

or 10.3 − 7.6 = 2.7 m of water absolute

Scanned by CamScanner

(Q) A syphon of diameter 200mm connects two having diff. in elevation of 20m. Length of syphon is 500m and the summit is 3m above water level in the upper reservior. The length of pipe from upper reservior to summit is 100m. Determine the discharge through the syphon and also pressure at the summit. Neglect minor losses. $f = 0.005$

Sol^n: $d = 200mm = 0.2m$

$H = 20m$

$L = 500m$

$h = 3m$

$L_1 = 100m$

$f = 0.005$

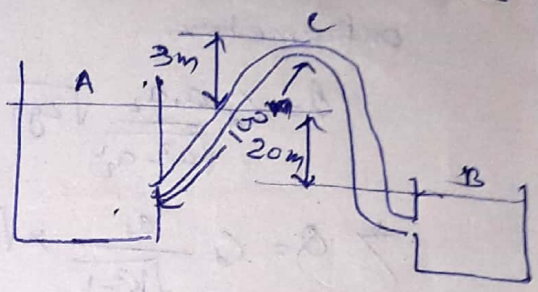

$$\frac{P_A}{\rho g} + \frac{V_A^2}{2g} + Z_A = \frac{P_B}{2} + Z_B + \frac{V_B^2}{2g} + h_f$$

$$\Rightarrow 0 + 0 + Z_A = 0 + 0 + Z_B + h_f \quad (\because P_A = P_B = \text{atm. pr.})$$

$$\Rightarrow Z_A - Z_B = h_f = \frac{4fLv^2}{2gd}$$

But $Z_A - Z_B = 20m \Rightarrow 20 = \frac{4 \times 0.005 \times 500 \times v^2}{2 \times 9.81 \times 0.2}$

$$\Rightarrow v = 2.8 \ m/s$$

Discharge $\Rightarrow Q = av = \frac{\pi}{4} d^2 \times v$

$$= \frac{\pi}{4} \times (0.2)^2 \times 2.8 = 0.0879 \ m^3/s$$

$$= 87.9 \ m^3/sec$$

→ Pressure at Summit :-

$$\frac{P_A}{\rho g} + \frac{V_A^2}{2g} + Z_A = \frac{P_C}{\rho g} + \frac{V_C^2}{2g} + Z_C + h_{f_{AC}}$$

$$\Rightarrow 0 + 0 + 0 = \frac{P_C}{\rho g} + \frac{v^2}{2g} + 3 + h_{f_{AC}}$$ (Taking datum as A and applying Bernoulli's eq^n to point A and C)

$$\Rightarrow 0 = \frac{P_C}{\rho g} + \frac{2.8^2}{9.81 \times 2} + 3 + \frac{4 \times 0.005 \times 100 \times 2.8^2}{0.2 \times 2 \times 9.81}$$

$$\Rightarrow 0 = \frac{P_C}{\rho g} + 0.399 + 3 + 4$$

$$\Rightarrow 0 = \frac{P_C}{\rho g} + 7.399 \Rightarrow \frac{P_C}{\rho g} = -7.399 \ m \text{ of water}$$

= Vacuum pressure at point C summit.

Scanned by CamScanner

* Flow through Nozzles :-

This device is used for measurement of flow in pipes. Its design features are intermediate to the venturimeter and orifizemeter.

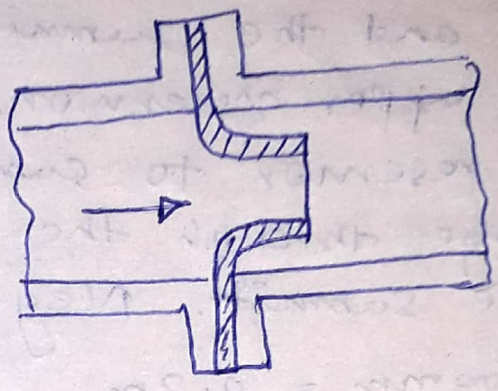

$$Q = C_d \frac{a_1 a_2}{\sqrt{a_1^2 - a_2^2}} \sqrt{2gh}$$

$$\Rightarrow Q = C_d \frac{a_1}{\sqrt{k^2 - 1}} \times \sqrt{2gh} \qquad \left[k = \frac{a_1}{a_2} \right.$$

Here, $C_d = 0.60$ to 0.64.

Scanned by CamScanner